Title **HIFI User Manual, Volume 2**

Prepared by	:	Luc Dubbeldam, Henri Aarts	Date	: 20 September 2004
Revised by	:	Henri Aarts	Date	: 2 May 2005 24 Jan. 2006 13 Feb. 2006 19-June 2007 1 August 2007 17 Oct. 2007 14 July 2008
Checked by	:		Date	:
Agreed by	:		Date	:
Authorised by	:		Date	:

Distribution list

Document Change Record

Issue	Date	Changed Section	Description of Change
1	20 Sept. 2004	All	First issue
1.1	16 Dec. 2004	12.1	Added section 12.1 “Operational Constraints”
1.2	2 May 2005	All	Comments by C. Scharmberg, e-mail 20 Oct. 2004
1.3	24 Jan. 2006		Formatting
1.4	13 Feb. 2006	12.3	Added operational procedures
2.0	20 June 2007	12.1	Operational constraints
		12.2	Power up/down
		12.4	Contingency procedures
3.0	17 Oct. 2007	8.1	Updates accoding e-mail L. Dubbeldam 9 Oct 2007 Inserted Stand-by I and Stand-by II modes
		8.2.2	Added “HRS FT0”, e-mail D. Teyssier 8 Oct 2007 Inserted Stand-by I and Stand-by II modes
		8.2.4	Added WBS settings, e-mail D. Teyssier 8 Oct 2007
		11.1.1.1	Added “HRS FT0”, e-mail D. Teyssier 8 Oct 2007
		12.2.1.1	Added different CUS, e-mail D. Teyssier 8 Oct 2007
		12.2.1	Replaced from SRON-G/HIFI/PR/2007-017 issue draft 0.2
		12.3	Updated according e-mail D. Teyssier 9 Oct 2007
		Annex 2	Replaced by HIFI_MOIS_V1.4_10Oct2007.zip
4.0	14 July 2008	8.1.2	Corrected status change according e-mail D Teyssier 19 May 2008, also ref. RID MAN-154
		9.2, 9.3	Memory and EEPROM organization included according RIDs: MAN-216, MAN-219, MAN-222
		9.4	OBS operations included according RID: MAN-218
		9.4.3.2	Patching procedures included according RID: MAN-157
		10	Corrected references according RID: MAN-156
		12.2.1	Removed Chopper health check from power-on procedures, according e-mail D Teyssier, 14-07-2008
		12.3	Updated according e-mail D. Teyssier 3 June 2008
		12.4.5	Updated BBID list, according e-mail D Teyssier, 14-07-2008
		Annex 1	Included most recent MIB, see RID: MAN-328
		Annex 2	Included HIFI Flight procedures: 20080307-HIFI-procedures.zip
		Annex 3	Included HIFI Commissioning procedures: HIFI-COP-MOIS_v0001.zip

Table of contents

8 Instrument operation modes ... 12
8.1 Nominal modes ... 12
8.1.1 Instrument Modes ... 12
8.1.2 HIFI Mode transisions ... 13
8.2 Mode descriptions ... 15
8.2.1 Off mode ... 15
8.2.2 Intermediate mode ... 16
8.2.3 Stand-by mode I ... 16
8.2.4 Stand-by mode II ... 17
8.2.5 Primary mode ... 17
8.3 Instrument failures ... 18
8.3.1 Fault management and redundancy provisions ... 18
8.3.2 Instrument failures ... 18
8.3.2.1 Failures detected at subsystem level ... 18
8.3.2.2 Failures detected at instrument level ... 19
8.3.2.3 Failures detected at CDMS-level ... 19
8.3.2.4 Failures detected at Ground level in House-keeping ... 19
8.3.2.5 Failures detected at Ground level in the science ... 19
8.3.3 Failure identification ... 20
8.3.4 Recovery actions ... 21
9 On-board software ... 22
9.1 Functional description ... 22
9.1.1 OBS architecture: architecture context diagram ... 22
9.1.2 OBS architecture: level 0 decomposition ... 22
9.1.3 OBS_Processing ... 25
OBS Architecture: CMD_SEQ ... 25
9.1.4 OBS Architecture: TMTC ... 26
9.1.5 OBS Architecture: LS ... 27
9.1.6 OBS Architecture: HK_ASK ... 28
9.1.7 OBS Architecture: HS0 ... 29
9.1.8 OBS Architecture: HS1 ... 30
9.1.9 OBS Architecture: Data Pack ... 31
9.1.10 OBS Architecture: HK_MONITOR ... 32
9.1.11 OBS Architecture: Interrupt_Handler_ISR2 ... 32
9.1.12 OBS Architecture: Interrupt_Handler_ISR0 ... 32
9.1.13 OBS Architecture: Interrupt_Handler_ISR3 ... 33
9.1.14 OBS Architecture: RESOURCE_CHECK ... 33
9.1.15 OBS Architecture: VM ... 33
9.1.16 OBS Architecture: SIMULATE_SCIENCE ... 33
9.1.17 OBS Architecture: TUNING ... 34
9.2 Memory organization and source code ... 35
9.3 Program Memory Segmentation ... 40
9.4 OBS Operations ... 41
9.4.1 Running the EEPROM-resident OBS ... 41
9.4.2 Loading the OBS via telecommands with BSW ... 41
9.4.3 Loading and patching the OBS via telecommands at runtime ... 42
9.4.3.1 OBS loading ... 43
9.4.3.2 OBS patching ... 44

9.4.3.2.1 Example 1: Implementing a patching at the IFSI premises. 44
9.4.3.2.2 Example 2: Implementing patching at SRON. 47
10 Summary of HK telemetry data 48
10.1 Summary of HK and diagnostic telemetry packets 48
10.2 Synthetic parameters 48
10.3 Event reports 48
10.4 On-ground limit check information 48
11 Summary of Instrument telecommand data 49
11.1 Summary of telecommand packets 49
11.1.1 Use of the telecommands 49
11.1.1.1 Start up 49
11.1.1.2 Configure FCU 50
11.1.1.3 Configure LCU 51
11.1.1.4 Configure HRS-H or HRS-V 53
11.1.1.5 Configure WBS-H or WBS-V 54
11.1.1.6 Configure spectroscopy 55
11.1.1.7 Switch off 55
11.1.1.8 Spectroscopy 55
11.1.1.9 Tuning 55
11.1.1.10 Miscellaneous 55
11.1.1.11 Memory 55
11.2 Reflection of telecommands on TM 55
11.3 Telecommand sequences 62
12 Instrument operations procedures 63
12.1 Operational Constraints 63
12.2 Commissioning operations procedures for ground testing 63
12.2.1 Power switch on/off 64
12.2.1.1 Introduction 64
12.2.1.2 HIFI POWER_ON, PRIME and redundant MODE, with warm dummies for fpu and LOU 65
12.2.1.2.1 Purpose 65
12.2.1.2.2 Instrument configuration 65
12.2.1.2.3 Software configuration 65
12.2.1.2.4 EGSE 65
12.2.1.2.5 Personnel 65
12.2.1.2.6 Pre-conditions 66
12.2.1.2.7 Post-conditions 66
12.2.1.2.8 Go / nogo 66
12.2.1.2.9 Procedure 67
12.2.1.3 HIFI POWER_ON, PRIME and redundant MODE, WITH warm LO AND WARM FPU (IST configuration) 73
12.2.1.3.1 Purpose 73
12.2.1.3.2 Instrument configuration 73
12.2.1.3.3 Software configuration 73
12.2.1.3.4 EGSE 73
12.2.1.3.5 Personnel 73
12.2.1.3.6 Pre-conditions 74
12.2.1.3.7 Post-conditions 74
12.2.1.3.8 Go / nogo 74
12.2.1.3.9 Procedure 75

12.2.1.4 HIFI POWER_ON, PRIME and redundant MODE, WITH warm LO AND COLD FPU (IST configuration) ... 81
12.2.1.4.1 Purpose ... 81
12.2.1.4.2 Instrument configuration ... 81
12.2.1.4.3 Software configuration ... 81
12.2.1.4.4 EGSE ... 81
12.2.1.4.5 Personnel ... 81
12.2.1.4.6 Pre-conditions ... 82
12.2.1.4.7 Post-conditions ... 82
12.2.1.4.8 Go / nogo ... 82
12.2.1.4.9 Procedure ... 83
12.2.1.5 HIFI POWER_ON, PRIME and redundant MODE, WITH COLD LO and COLD FPU (TV test) 89
12.2.1.5.1 Purpose ... 89
12.2.1.5.2 Instrument configuration ... 89
12.2.1.5.3 Software configuration ... 89
12.2.1.5.4 EGSE ... 89
12.2.1.5.5 Personnel ... 90
12.2.1.5.6 Pre-conditions ... 90
12.2.1.5.7 Post-conditions ... 90
12.2.1.5.8 Go / nogo ... 90
12.2.1.5.9 Procedure ... 91
12.2.1.6 HIFI POWER_OFF ... 97
12.2.1.6.1 Purpose ... 97
12.2.1.6.2 Instrument configuration ... 97
12.2.1.6.3 Software configuration ... 97
12.2.1.6.4 EGSE ... 97
12.2.1.6.5 Personnel ... 97
12.2.1.6.6 Pre-conditions ... 97
12.2.1.6.7 Post-conditions ... 98
12.2.1.6.8 Go / nogo ... 98
12.2.1.6.9 Procedure ... 99
12.3 Nominal operations procedures ... 101
12.3.1 Switch On Procedures ... 101
12.3.1.1 HIFI Switched off to Intermediate, Prime ... 101
12.3.1.2 HIFI Switched off to Intermediate, Redundant ... 101
12.3.1.3 HIFI Global Switch on in OL context, Prime ... 101
12.3.1.4 HIFI Global Switch on in OL context, Redundant ... 105
12.3.1.5 HIFI Global Switch on in CL context, Prime ... 105
12.3.1.6 HIFI Global Switch on in CL context, Redundant ... 105
12.3.1.7 HIFI ICU power up, Prime ... 105
12.3.1.8 HIFI ICU power up, Redundant ... 106
12.3.2 OBSM procedures ... 106
12.3.2.1 HIFI load boot in rescue mode, Prime ... 106
12.3.2.2 HIFI load boot in rescue mode, Redundant ... 106
12.3.2.3 Load full new HIFI OBSW image in intermediate mode ... 106
12.3.2.4 Load HIFI OBSW patch in intermediate mode ... 107
12.3.3 Transition from StandbyI to Standby II procedures ... 107
12.3.3.1 HIFI Standby II in OL context with Laser 1 On, Prime ... 107
12.3.3.2 HIFI Standby II in OL context with Laser 1 On, Redundant ... 107

12.3.3.3 HIFI Standby II in OL context with Laser 2 On, Prime 107
12.3.3.4 HIFI Standby II in OL context with Laser 2 On, Redundant 108
12.3.3.5 HIFI Standby II in CL context with Laser 1 On, Prime 108
12.3.3.6 HIFI Standby II in CL context with Laser 2 On, Prime 108
12.3.3.7 HIFI Standby II in CL context with Laser 1 On, Redundant 108
12.3.3.8 HIFI Standby II in CL context with Laser 2 On, Redundant 109
12.3.4 Transition from StandbyII to Primary procedures 109
12.3.4.1 HIFI Primary in OL and CL contexts with Laser 1 On, Prime and Redundant 109
12.3.4.2 HIFI Primary in OL and Primary contexts with Laser 2 On, Prime and Redundant 109
12.3.5 Transition from Primary to Standby II procedures 109
12.3.5.1 HIFI Primary to StandbyII in OL context with Laser 1 On, Prime 109
12.3.5.2 HIFI Primary to StandbyII in OL context with Laser 1 On, Redundant 110
12.3.5.3 HIFI Primary to StandbyII in OL context with Laser 2 On, Prime 110
12.3.5.4 HIFI Primary to StandbyII in OL context with Laser 2 On, redundant 110
12.3.5.5 HIFI Primary to StandbyII in CL context with Laser 1 On, Prime 110
12.3.5.6 HIFI Primary to StandbyII in CL context with Laser 2 On, Prime 111
12.3.5.7 HIFI Primary to StandbyII in CL context with Laser 1 On, Redundant 111
12.3.5.8 HIFI Primary to StandbyII in CL context with Laser 2 On, Redundant 111
12.3.6 Transition from StandbyII to StandbyI procedures 111
12.3.6.1 HIFI StandbyII with Laser1 on into StandbyI in OL context, Prime 111
12.3.6.2 HIFI StandbyII with Laser1 on into StandbyI in OL context, Redundant 112
12.3.6.3 HIFI StandbyII with Laser2 on into StandbyI in OL context, Prime 112
12.3.6.4 HIFI StandbyII with Laser2 on into StandbyI in OL context, Redundant 112
12.3.6.5 HIFI StandbyII with Laser1 on into StandbyI in CL context, Prime 113
12.3.6.6 HIFI StandbyII with Laser2 on into StandbyI in CL context, Prime 113
12.3.6.7 HIFI StandbyII with Laser1 on into StandbyI in CL context, Redundant 113
12.3.6.8 HIFI StandbyII with Laser2 on into StandbyI in CL context, Redundant 113
12.3.7 HIFI global switch-off procedures 114
12.3.7.1 HIFI Global Switch-Off, Prime 114
12.3.7.2 HIFI Global Switch-Off, Redundant 114
12.3.7.3 HIFI ICU Switch-Off from Rescue, Prime 114
12.3.7.4 HIFI ICU Switch-Off from Rescue, Redundant 114
12.3.8 Transition from OL to CL context and vice-versa 115
12.3.8.1 HIFI switch from OL to CL context, Prime 115
12.3.8.2 HIFI switch from OL to CL context, Redundant 115
12.3.8.3 HIFI switch from CL to OL context, Prime 115
12.3.8.4 HIFI switch from CL to OL context, Redundant 115
12.3.9 Check Procedures 116
12.3.9.1 HIFI OBS SFT 116
12.3.9.2 HIFI Chopper Open loop Set Health Check, Prime 116
12.3.9.3 HIFI Chopper Open loop Set Health Check, Redundant 116
12.3.9.4 HIFI Chopper Open loop Scan Health Check, Prime 116
12.3.9.5 HIFI Chopper Open loop Scan Health Check, Redundant 117
12.3.9.6 HIFI Chopper Closed Loop Health Check, Prime 117
12.3.9.7 HIFI Chopper Closed Loop Health Check, Redundant 117
12.3.9.8 HIFI Peak-up simulation 117
12.3.10 Local Oscillator Specific Procedures 118
12.3.10.1 HIFI Upload LCU Patches Flight, Prime and Redundant 118
12.3.10.2 HIFI Readback LCU Table Flight, Prime and Redundant 118
12.3.10.3 HIFI Upload LCU Table Flight, Prime 118

12.3.10.4 HIFI Upload LCU Table Flight, Redundant 119
12.4 Commissioning operations procedures 120
12.4.1 Functional test procedures 120
12.4.1.1 HIFI WBS Functional Tests, Prime 120
12.4.1.2 HIFI FPU Functional Tests, Prime 120
12.4.1.3 HIFI FPU Functional Tests, Redundant 120
12.4.1.4 HIFI HRS Functional Tests, Prime 121
12.4.1.5 HIFI Up-Converter Functional Tests, Prime 121
12.4.1.6 HIFI Up-Converter Functional Tests, Redundant 121
12.4.1.7 HIFI LOU Functional Tests, Prime 121
12.4.1.8 HIFI LOU Functional Tests, Redundant 122
12.4.2 Chopper response time tests 123
12.4.2.1 HIFI chopper response time, Prime 123
12.4.2.2 HIFI chopper response time, Redundant 123
12.4.3 LO purity tests 123
12.4.3.1 HIFI LO purity test in band 3b, Prime 123
12.4.3.2 HIFI LO purity test in band 7b, Prime 123
12.4.4 Other Commissioning procedures 124
12.4.5 List of used BBID 128
12.4.6 Importing a new CUS release 134
12.4.7 The configuration files. 134
12.5 Contingency recovery procedures 135
13 Instrument budgets 139
13.1 Power budget 139
13.2 Data budget 139
13.3 Mass budget 139
13.4 Error and alignment budget 140
13.5 Timing budget 140
14 Science data definition 141
14.1 Science data transfer 141
14.1.1 Start HRS science dataframe 142
14.1.2 Start WBS science dataframe 143
14.1.3 Science data reports 147
14.1.3.1 Science packet 24 bits 147
14.1.3.2 Science packet 16 bits 147
15 Annex 1: MIB 149
16 Annex 2: HIFI Flight Procedures 150
17 Annex 3: HIFI Commisioning procedures 151
18 Annex 4: Details of Contingency procedures 152

Table of figures

Figure 8.1-1 HIFI mode transitions *13*
Figure 9.1-1 ICU OBS Architecture Context Diagram *22*
Figure 9.1-2 The ICU OBS Architecure Diagram *24*
Figure 9.1-3 OBS Processing decomposition *25*
Figure 9.1-4 Function Decomposition of the module CMD_SEQ *26*
Figure 9.1-5 Function Decomposition of module TMTC *27*
Figure 9.1-6 Function Decomposition of module LS *28*
Figure 9.1-7 Function Decomposition of module HK_ask *29*
Figure 9.1-8 Function Decomposition of module HK_ask *30*
Figure 9.1-9 Function Decomposition of module *31*
Figure 9.1-10 Function Decomposition of module HK_ask *32*
Figure 9.1-11 Function Decomposition of module Tuning *34*
Figure 9.2-1, EEPROM/DM Pages in the DSP Data Memory space *35*
Figure 9.2-2, PM Start Address and PM length header fields utilization *37*
Figure 9.2-3, "Pointer to the next EEPROM page" header field utilization *38*
Figure 9.2-4, FCS Header field utilization: The boot software check the FCS of the EEPROM page and the FCS of the data to be written in Program Memory *39*
Figure 9.2-5, EEPROM Primary and Secondary partition *40*
Figure 14.1-1 Word-numbering in WBS-HS stream and TM stream *146*

List of Tables

Table 8.3-1 Symptoms and corresponding compensations *21*
Table 9.2-1, EEPROM/DM header (first seven words of each page) *36*
Table 11.2-1 Command parameter reflection *60*
Table 11.2-2 Analog FCU-monitor parameters affected by commands *61*
Table 13.1-1 Load on Main bus, Primary Mode and Standby Mode *139*
Table 13.3-1 Mass table *140*
Table 14.1-1 ***Structure Identifiers for Science packets*** *141*
Table 14.1-2 HRS Science Data Frame *142*
Table 14.1-3 WBS Science Data Frame *144*
Table 14.1-4 FirstChannelNumber for the 16 GaAs-packets *148*

8 INSTRUMENT OPERATION MODES

8.1 Nominal modes

The modes described in this section are modes in terms of power dissipation.

8.1.1 Instrument Modes

HIFI has the following modes:

Off mode.
In this mode all power is removed from the instrument.
This mode will be used during emergencies and other critical phases in the Herschel mission (e.g. during launch and orbit insertion).

Stand-by mode.
In this mode:

- All units in the SVM are active,
- Only thermal control of the LOU is active,
- The FPU is inactive,
- Housekeeping data will be available,
- No science data are produced,

In this mode other instruments may be active,
This mode will be used when HIFI is not primary during normal science operations.

Primary mode.
In this mode:

- The instrument is operating,
- One mixer band and one LO sub-band are active,
- Scientific data are generated,
- Housekeeping data are generated,
- Pointing corrections may be generated as a result of peak-up procedures,

The instrument warm-up time, from standby mode, will be less than 1 hour.
The warm up time for the LO-, WBS- and HRS-subsystems from cold (i.e. from OFF mode) will be much more than 1 hour, up to 24 hours for the WOH/V.

Intermediate mode.
This mode is entered after successful boot-command or during a nominal switch off procedure.
In this mode:

- Only the ICU is active.
- Housekeeping data are generated
- No science data are produced,
- HIFI subsystems powered: ICU, FCU

Rescue mode.

This mode is the result of a switch-on of the ICU.
In this mode:

- The Boot-software is running
- Event reports are generated
- Telecommands of service type 6 (memory management) can be received and executed. (without generating acknowledgement reports of service type 1)
- Telecommands of service type 8 (perform activity) can be received to resume loading
- The Application software can be started by a load-boot or force-boot telecommand.

This mode can also be entered from the intermediate mode.

8.1.2 HIFI Mode transisions

The following mode transitions can be made:

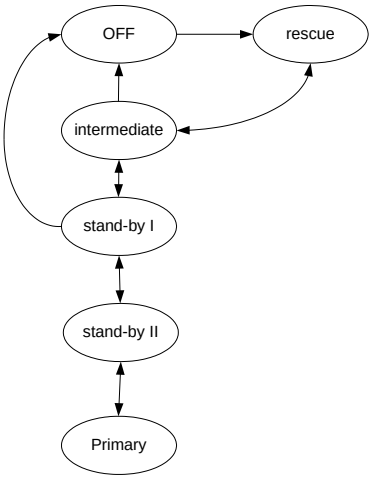

Figure 8.1-1 HIFI mode transitions

OFF to RESCUE
After switch-on the instrument ends in the rescue mode.
Required commands:
To PDU: switch on ICU

RESCUE to INTERMEDIATE
When the ICU is in the Rescue-mode the boot-procedure brings HIFI to the intermediate-mode.
Required commands:
To ICU: Force_boot to start the application software in the EEPROM
or
To ICU: Load_boot to start the application software that has been loaded while the ICU was in the Rescue mode.

INTERMEDIATE to STAND-BY I
In the stand-by mode all subsystems are switched on. The WBS lasers stay off.

For each subsystem to be switched on the following steps shall be taken:
Notify ICU that subsystem will be switched on in 1 s.
Switch subsystem on

Required commands:
To ICU: notify next instrument status.
To PDU: switch on LCU
To ICU: notify next instrument status.
To PDU: switch on WBS-V subsystem
To ICU: notify next instrument status.

- To PDU: switch on WBS-H subsystem
- To ICU: notify next instrument status.
- To PDU: switch on HRS-V subsystem
- To ICU: notify next instrument status.
- To PDU: switch on HRS-H subsystem

INTERMEDIATE to RESCUE
The instrument can be brought into the rescue mode by means of the Jump-to-boot telecommand..

RESCUE to INTERMEDIATE
The resume-loading command brings the instrument from the rescue mode into the intermediate mode.

STAND-BY I to STAND-BY II
The instrument enters the stand-by II mode by stwitching on the lasers in both the WBS-H and the WBS-V.

STAND-BY II to PRIMARY
The difference between primary and stand-by is:

- LO status

The instrument enters the primary mode by activating the LO-subsystem.
Notice:
The instrument must not be switched off from the primary mode.

PRIMARY to STAND-BY II
The instrument enters the standby mode from the primary mode by de-activating the LO-subsystem.

STAND-BY II to STAND-BY I
The instrument enters the stand-by II mode by stwitching off the lasers in both the WBS-H and the WBS-V.

STAND-BY I to INTERMEDIATE
For each subunits to be switched off the following steps shall be taken:
Notify ICU that subsystem will be switched off in 1 s.
Switch subsystem off

Required commands:

- To ICU: notify next instrument status.
- To PDU: switch off HRS-H subsystem.
- To ICU: notify next instrument status.
- To PDU: switch off HRS-V subsystem.
- To ICU: notify next instrument status.

- To PDU: switch off WBS-H subsystem.
- To ICU: notify next instrument status.
- To PDU: switch off WBS-V subsystem.
- To ICU: notify next instrument status.
- To PDU: switch off LCU.

INTERMEDIATE to OFF
The instrument is off when the ICU is switched off. The ICU should only be switched off when no other subunit is on.
Required commands:

- To PDU: switch off HICU

EMERGENCY OFF
The nominal way to switch off HIFI is through stand-by > intermediate > off.
A less elegant way is from stand-by directly to off.
An undesired (hazardous) way to switch off HIFI is directly from the primary mode. (The LO-subsystem should be de-activated in a proper way)

8.2 Mode descriptions

A preliminary overview in HIFI IID B, section 4.6

8.2.1 Off mode

- Pre-requisites
  Power for all units is off
- Resources
  Power: 0 W
  Data Rate: HK: 0 kbit/s
  Science: 0 kbit/s
- Operational constraints
  No operations possible
- Mode transition operations
  To enter the Intermediate mode:
  Power on ICU

(release a command to force the boot process)
All ICU-Monitor parameters must be valid and not out-of-limit.

- Unit status
  All units un-powered
- Instrument monitoring by CDMU: not applicable
- Internal monitoring: None

8.2.2 Intermediate mode

- Pre-requisites
  ICU on
  FCU powered
  All other units off
- Resources
  Power:
  Panel –Y-Z: 41.9 W
  Panel –Y: 0.0 W
  Data Rate:
  HK rate: 2 kbit/s
  Science: 0 kbit/s
- Operational constraints
  No operations possible
- Mode transition operations
  To enter the Stand-by mode:
  Release the HIFI_notify_PDU_status telecommand with HIF_FCU_S = ON

All FCU-Monitor parameters must be valid and not out-of-limit.
Release the HIFI_notify_PDU_status telecommand with HIF_WBSH_S= ON
Power on WBS_H
TBD set of WBS_H-Monitor parameters must be valid and not out-of-limit.
Release the HIFI_notify_PDU_status telecommand with HIF_WBSV_S= ON
Power on WBS_V
TBD set of WBS_V-Monitor parameters must be valid and not out-of-limit.
Release the HIFI_notify_PDU_status telecommand with HIF_HRSH_S= ON
Power on HRS_H
TBD set of HRS_H-Monitor parameters must be valid and not out-of-limit.
Perform HRS FT0
Release the HIFI_notify_PDU_status telecommand with HIF_HRSV_S= ON
Power on HRS_V
TBD set of HRS_V-Monitor parameters must be valid and not out-of-limit.
Perform HRS FT0
Release the HIFI_notify_PDU_status telecommand with HIF_LCU_S = ON
Power on LCU
TBD set of LCU-Monitor parameters must be valid and not out-of-limit.

- Unit status
  ICU and FCU powered, all other units un-powered
- Instrument monitoring by CDMU - not applicable
- Internal monitoring: TBD

8.2.3 Stand-by mode I

- Pre-requisites
  All units, except FPU, LOU, IFH and IFV, powered, WBS-H and WBS-V lasers off
- Resources
  Power:
  Panel –Y-Z: 135.4 W

Panel –Y: 167.8 W
Data Rate:
HK rate: 2 kbit/s
Science: 0 kbit/s

- Operational constraints:
  No science data collection
- Mode transition operations
  To enter the Stand-by II mode:
  Configure FCU
  Configure LCU
  Configure HRS-H
  Configure HRS-V
  Configure WBS-H
  Configure WBS-V
- Unit status
  All unit except FPU and LOU powered, WBS-H and WBS-V lasers off
- Instrument monitoring by CDMU - not applicable
- Internal monitoring: TBD

8.2.4 Stand-by mode II

- Pre-requisites
  All units, except FPU, LOU, IFH and IFV, powered, WBS-H and WBS-V lasers on
- Resources
  Power:
  Panel –Y-Z: 135.4 W
  Panel –Y: 167.8 W
  Data Rate:
  HK rate: 2 kbit/s
  Science: 0 kbit/s
- Operational constraints:
  No science data collection
- Mode transition operations
  To enter the Primary mode:
  Switch WBS-H and WBS V lasers on
- Unit status
  All unit except FPU and LOU powered
- Instrument monitoring by CDMU - not applicable
- Internal monitoring: TBD

8.2.5 Primary mode

- Pre-requisites
  All units, except FPU, LOU, IFH and IFV, powered and configured
- Resources
  Power:
  Panel –Y-Z: 138.1 W
  Panel –Y: 178.5 W
  Data Rate:

HK rate: 2 kbit/s
Science: 98 kbit/s

- Operational constraints: TBD
- Mode transition operations
  To enter the Stand-by II mode:
  Remove bias from FPU and LOU
  set all spectrometer's attenuators to maximum attenuation
  switch WBS zero ON
  leave WBS-H and WBS-V lasers on
- Unit status
  All units powered and configured
- Instrument monitoring by CDMU: not applicable
- Internal monitoring: TBD

8.3 Instrument failures

8.3.1 Fault management and redundancy provisions

8.3.2 Instrument failures

Failures may be detected at subsystem, instrument or higher level. This section identifies where in the HIFI instrument failures may be detected and which unit reacts on them

8.3.2.1 Failures detected at subsystem level

ICU
The ICU and the On-board software have several checks on its own functioning. These will be specified in the OBS-user manual.

FPU
The FPU has several house-keeping parameters containing an error-status.
Clarification of these words is pending (RD-13).

LOU
The LCU is dedicated to the error detection. (RD-08)

False commands
Refused commands are included in a HK-parameter (HL_FALCOM).This command is included in the periodic house-keeping and no action on-board is foreseen.

Drain current overflow
A Drain-overflow parameter is included a house-keeping parameter. This parameter is included in the periodic house-keeping and no action on-board is foreseen. The reset of this overflow-situation is routinely done at the start of each configuration

WBS
WBS does not detect failures within the subsystem

HRS

HRS does not detect failures within the subsystem

8.3.2.2 Failures detected at instrument level

A limited number of housekeeping parameters are monitored by the ICU. If needed the ICU takes action.

FPU

Actel not responding
In case of no-response of an Actel the corresponding board will be switched off. An event will be generated.

Heater current
The heater current will be monitored. In case the heater current remains on (while it should be off) the corresponding section will be switched off. An event will be generated.

LOU
The ICU does not monitor the proper functioning of the LOU
See remark above at Introduction. To Be Confirmed.

WBS
The ICU monitors one temperature-sensor. In case of out-of-limit, the laser will be switched off. The other laser will not be switched on. An event will be generated.

HRS
The ICU does not monitor the HRS

8.3.2.3 Failures detected at CDMS-level

Monitoring of HK
The CDMS does not assess the content of the HK.

Response to events
At this moment no failure detected by the instrument would generate an event for the CDMS.

In any future case where HIFI would specify an event, the requested response is to switch the instrument off according to a specified procedure.

Communication failures
TBD

8.3.2.4 Failures detected at Ground level in House-keeping

The HIFI FMECA reports all possible failures in the circuits of the HIFI instrument and how these may result in anomalies in the House-keeping.
For all these anomalies a further analysis is required to locate the failure. The table relating the anomaly to the failure location is included in the Annex.

8.3.2.5 Failures detected at Ground level in the science

The HIFI FMECA reports all possible failures in the circuits of the HIFI instrument and how these may result in degraded performance.
For all these anomalies a further analysis is required to locate the failure. The table relating the anomaly to the failure location is included in the Annex.

8.3.3 Failure identification

The table below lists the symptoms to be monitored and the possible compensation.
In most cases an analysis is required to find the cause of the problem and the select the proper compensation

Symptom	Detected by	Compensation
loss of image quality	ICC	none
anomalous calibrator temperature	ESOC	none
no science data	ICC	switch to redundant ICU
no science data	ICC	none
no science data from WBS	ICC	switch to redundant laser
no HK from FCU	ESOC	switch to redundant ICU
no HK or anomalous HK from FCU	ESOC	switch to redundant ICU
no HK or anomalous HK from FCU	ESOC	none
anomalous HK values	ESOC	switch to redundant ICU
anomalous HK values	ESOC	none
anomalous science data	ICC	switch to redundant ICU
anomalous science data	ICC	none
anomalous calibrator data	ICC	switch to redundant ICU
no HK from HRS-h	ICC	switch to redundant ICU
no HK from HRS-h	ESOC	none
anomalous science data from HRS-h	ICC	none
no science data from HRS-h	ICC	none
no science data from HRS-h when switched over	ICC	none
no TM data from HIFI	CDMS	switch to redundant ICU
no TM data from HIFI	CDMS	switch to bus B
primary power: current= 0A	ESOC	switch to redundant ICU
primary power: LCL tripped	ESOC	switch to redundant ICU
no HK data from HIFI	ESOC	switch to redundant ICU
no Science/HK data from HRS and WBS	ICC	switch to redundant ICU
unable to start-up	ESOC	switch to redundant ICU
no or anomalous TM data from HIFI	ESOC	switch to redundant ICU
anomalous TM data from HIFI	???	none
no HK from LCU	ESOC	switch to redundant ICU
no HK or anomalies in HK from HRH	ESOC	switch to redundant ICU
no HK or anomalies in HK from HRV	ESOC	switch to redundant ICU
no HK or anomalies in HK from WEH	ESOC	switch to redundant ICU
no HK or anomalies in HK from WEV	ESOC	switch to redundant ICU
no HK/science data from HRH	ESOC	switch to redundant ICU
no HK/science data from HRV	ESOC	switch to redundant ICU

Symptom	Detected by	Compensation
no HK/science data from WEH	ESOC	switch to redundant ICU
no HK/science data from WEV	ESOC	switch to redundant ICU
anomalous HK value		switch to redundant ICU
anomalous HK value		next read-out should be correct
anomalous bias setting		switch to redundant ICU
no HK from LSU		switch to redundant ICU
anomalous HK from LCU		switch to redundant ICU
no lock read-out		switch to redundant ICU
no power fault monitor		switch to redundant ICU
no frequency fault monitor		switch to redundant ICU
no temperature read-out		switch to redundant ICU
no science data		none
no temperature control during commissioning phase		switch to redundant ICU
no HK from WBS-h		switch to redundant ICU
no HK from WBS-h		none
no HK or anomalous HK from WBS-h		none
no HK from WBS-h		none
anomalous calibration data		none
anomalous temperature		none

Table 8.3-1 Symptoms and corresponding compensations

8.3.4 Recovery actions

9 ON-BOARD SOFTWARE

9.1 Functional description

9.1.1 OBS architecture: architecture context diagram

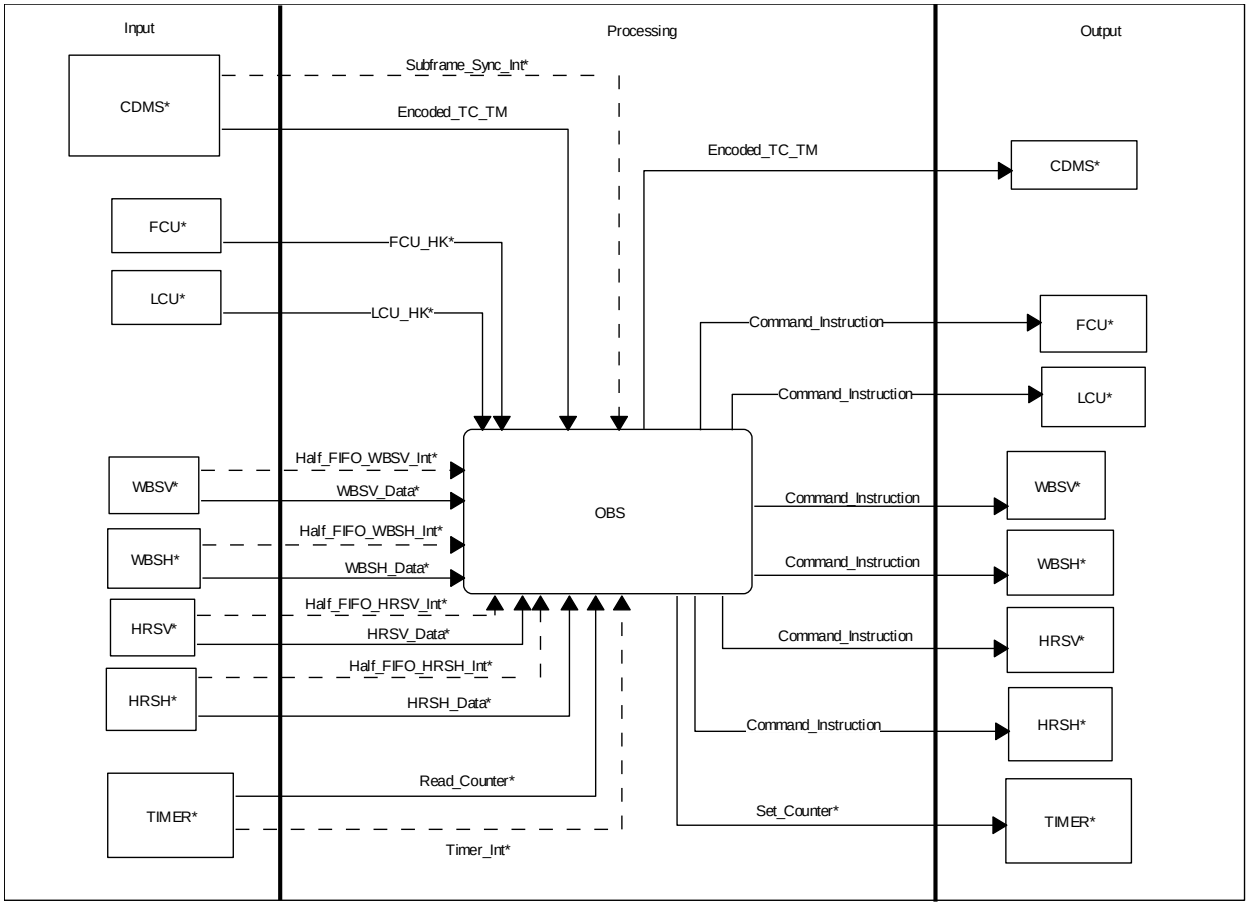

Figure 9.1-1 ICU OBS Architecture Context Diagram

9.1.2 OBS architecture: level 0 decomposition

The DPU/ICU OBS will run under VIRTUOSO, an operating system designed for use in DSP environments, where speed of response to interrupts is usually critical.
This environment allows the implementation of a multitasking application: a VIRTUOSO task is an independent module, written in C, with its own thread of execution and set of system resources. It performs a well defined function or set of functions and talks to other tasks using other system objects (in the OBS case FIFOs and memory pools have been used for the intertask communication).
The origin task writes data into the memory pool and sends a FIFO message containing the pointer to the data block in the pool. In this way the only data that are moved across the system, are the pointers to the frame buffers. The task synchronization has been implemented by using Virtuoso events and semaphores.

The OBS includes a START UP task, with the highest priority, which run as soon as the PROM switch-on procedure is completed and the control is passed to the OBS application.
This task makes all the initializations that aren't made automatically by the OS using the application configuration files. After a check of the DPU/ICU status (HW housekeeping data check), the task generates an event with the info about the check results (stored in the EV_pool) and writes a message on the EV_TM_queue with the pointer to the event structure in the EV_pool. The TMTC task (see the OBS_PROCESSING component decomposition) then checks the queue and sends the generated event to the CDMS. In case of event OK, the CDMS continues the DPU/ICU start up, by switching on the other subsystems.
OBS includes also a task dedicated to the exception/errors handling (ERROR_HANDLER): it is a high priority task in order to be sure that the exceptions on board are signalled to the CDMS as soon as possible. It reads the VIRTUOSO FIFO ER_queue (where all the exceptions, the events and the errors trapped during the processing are enqueued) and stores an event report with the relevant error info in the events memory pool. The pointer to the report is passed to the task dedicated to the 1553 I/F handling (TMTC task) in a message on the EV_queue FIFO.

The UPDATE_TIMEKEEPER task is dedicated to the onboard time synchronisation.
When the synch signal provided each second by the CDMS via the 1553 I/F (mode command "synchronize without data word" transmitted in slot 1 of subframe 1) is received, the IRQ2 interrupt is raised and the corresponding Interrupt service routine ISR2 is called. In this case, the routine generates the TS_Event, which in turn enables the UPDATE_TIMEKEEPER task.
The task reads the time stamps from the 1553 (1/65536 sec precision) and from the VIRTUOSO Low Resolution timer (1 msec thick) and stores them in appropriate locations. Each time the synchronised onboard time is needed, a routine (getTS()) that calculates the offset between the two clocks taking into account the different precisions and the possible wraparound of the LR timer shall be called.

All the other OBS tasks, dedicated specifically to the implementation of the commanding on board, have been grouped in the OBS_Processing component, whose detailed decomposition is reported in the following section.
All the foreseen tasks will be started automatically at the switch on, when the application is loaded: they shall have all the same priority. The only difference is for the VM task, dedicated to the Virtual Machine implementation (see section ….) which is not initialized at the start-up and has a higher priority, necessary for guaranteeing the precision in the measurement timeline.

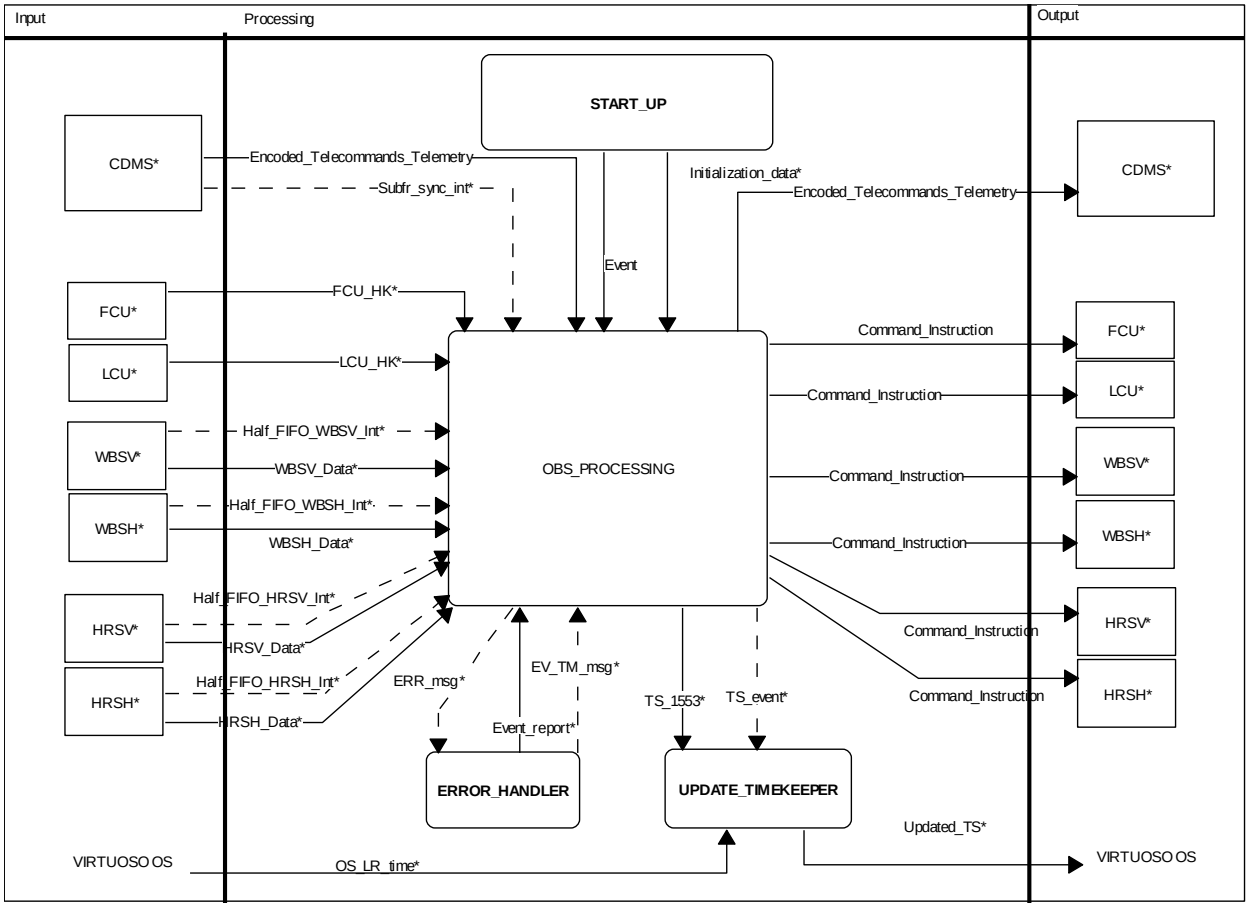

Figure 9.1-2 The ICU OBS Architecure Diagram

9.1.3 OBS_Processing

OBS PROCESSING is a component introduced in the architecture in order to ease the readability of the architecture diagrams. It is not mapped into a single task, but contains all the tasks related to the implementation of the commanding onboard, as shown in the architecture diagram reported in figure 4.2

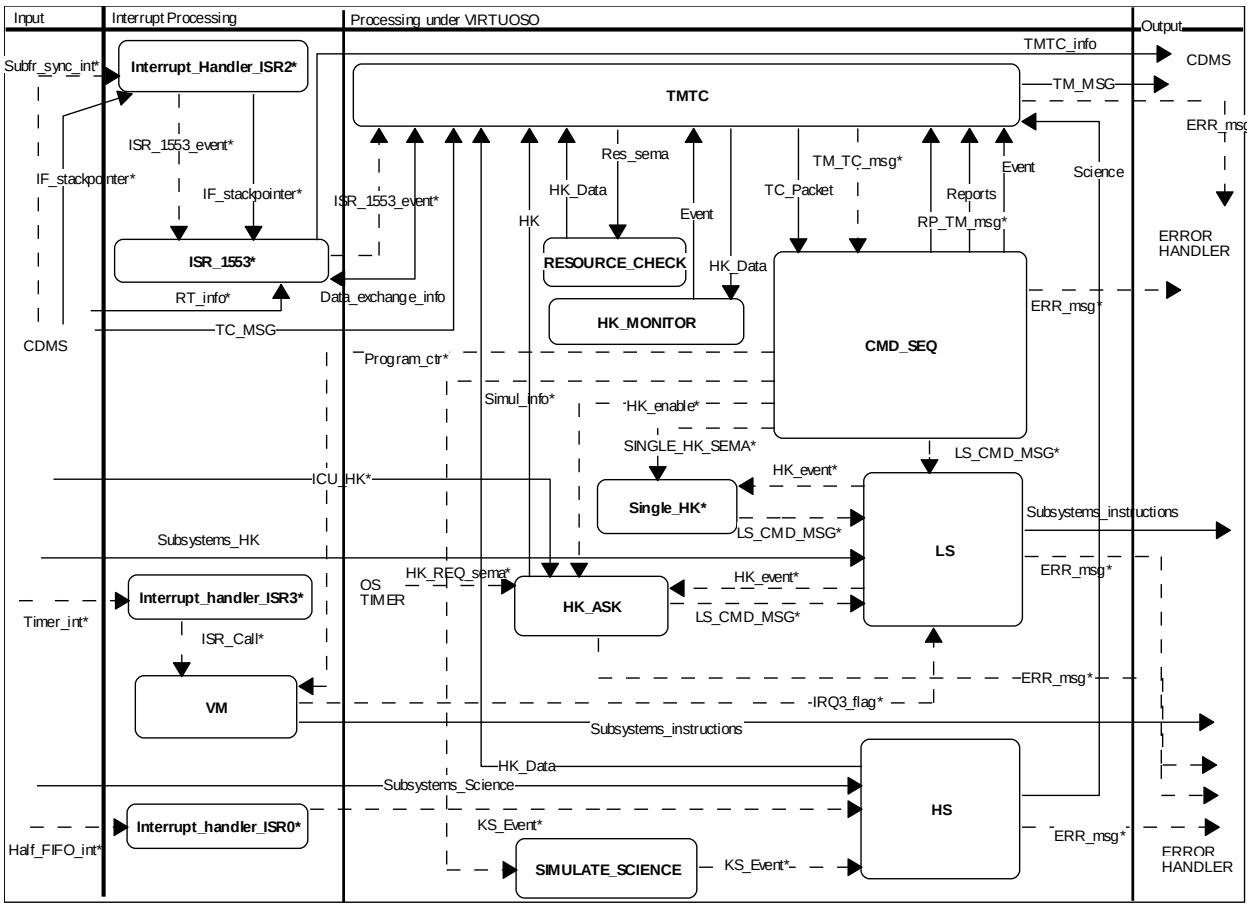

Figure 9.1-3 OBS Processing decomposition

OBS Architecture: CMD_SEQ

This is the main task of the OBS. It is in charge to check, interpret and execute all the received TCs. CMD_SEQ is in a wait state until a FIFO message is received from the TMTC task, notifying the availability of anew TC. CMD_SEQ reads the TC from the TC_Pool and performs the complete sequence of TCs verification steps, down to their "executability" (i.e. the validity of the Application data in the TCS).
The task decodes the TCs and takes the appropriate actions.
If the command is a ICU command, it is immediately executed. If it is a command to the S/S it is exploded in atomic S/S commands which are then stored in the Low Priority Low speed I/F command buffer; a semaphore signal is generated in order to put in the run queue the LS_Task which is in charge of the actual

command transmission to the S/S. Immediate commands to be sent to S/S will be stored in a second, Highest priority, Low Speed I/F command buffer.

If the TC is a Function Management Service Command, used to command a measurement execution, the VM execution is started and the control is passed to the VM task. To start VM the CMD_SEQ task disables the IRQ3, locks the timer and sets it to raise the next interrupt after few msec. Then the IRQ3 is enabled again. When the interrupt is raised, the VM task is started by the Interrupt service routine ISR3. The pointer to the exec_table containing the VM code to be executed (program counter) is read in a global variable filled in by CMD_SEQ. This sequence of actions needed to start VM operations is represented by the Start_Stop_VM control flow. This task initialises and enables the periodic HK collection via the HK_Enable event.
The TC verification Service is fully implemented by this task, as well as the Memory Management , the Packet Sequence Control and the time management (TBC) services.
This task initialises and enables the periodic HK collection.

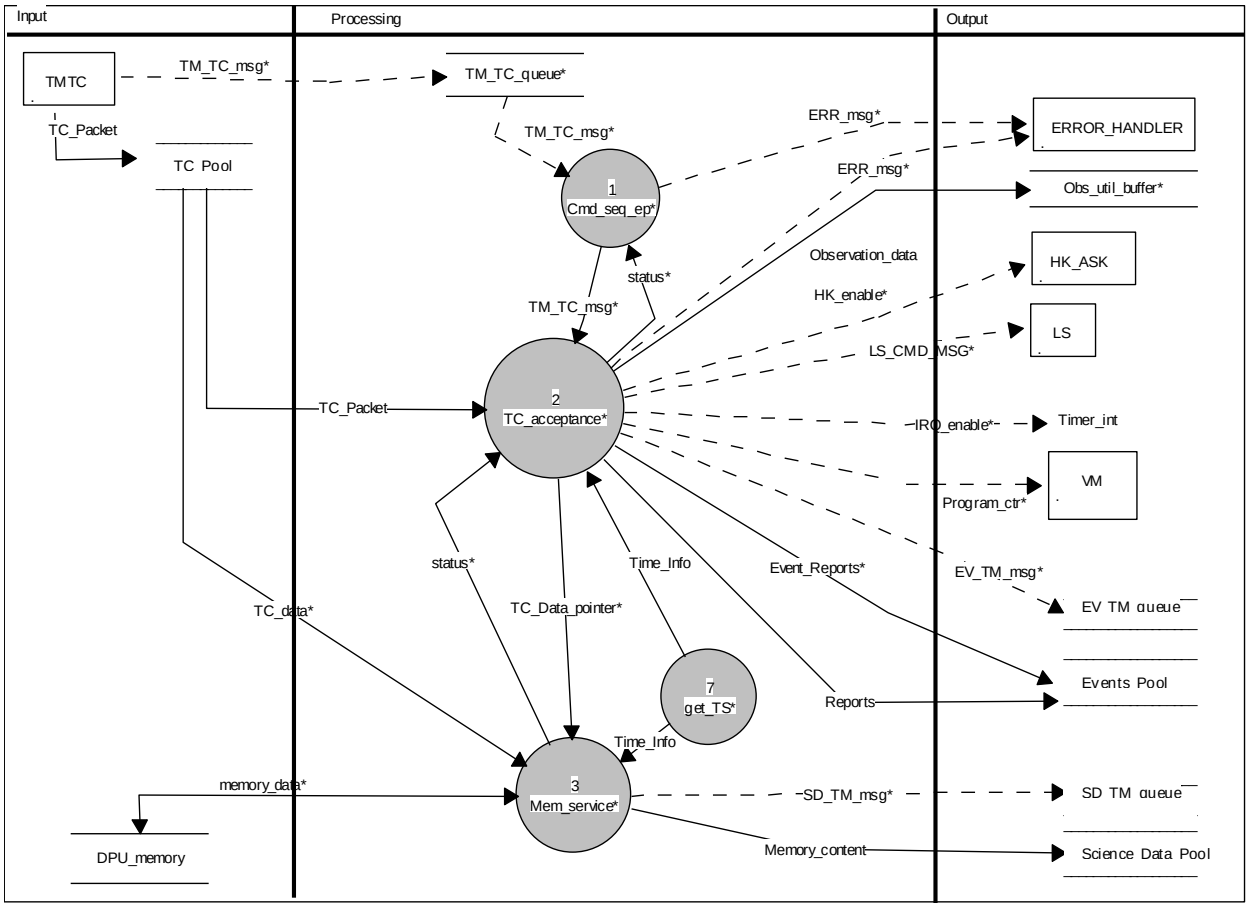

Figure 9.1-4 Function Decomposition of the module CMD_SEQ

9.1.4 OBS Architecture: TMTC

This task handles the interface with the spacecraft.

It is enabled by an event set by the interrupt service routine (Interrupt_Handler_P2) associated to the 1553 subframe interrupt (Bcst_subframe_sync_int).
When enabled, the task reads, checks and interprets the 1553 messages coming from the CDMS and prepares the TM packets to be read from the CDMS.
In case of TC reception, the data words are stored in the TC_packets buffer (TC_pool), and a message containing the pointer to the buffer is sent to the CMD_seq task via the TM_TC_queue.
The TM sending is performed by reading the four (TBC) FIFOs associated to the 4 memory pools containing the data ready to be sent out: event FIFO (EV_queue), Reports FIFO (RP_queue, related to the memory pool with all the reports: TC verification reports, time management reports, packet error control reports), HK FIFO (HK_queue) and Science Data FIFO(SD_queue). The queues are always read in the order they have been listed (the events have the highest priority). When a message is found in the queue, with a pointer to a packet ready to be transmitted, the corresponding memory pool is read and the packet is formatted according to the 1553 protocol (20 bits data words). The relevant 1553 registers are set in order to signal the CDMS that some TM data are ready to be sent out.

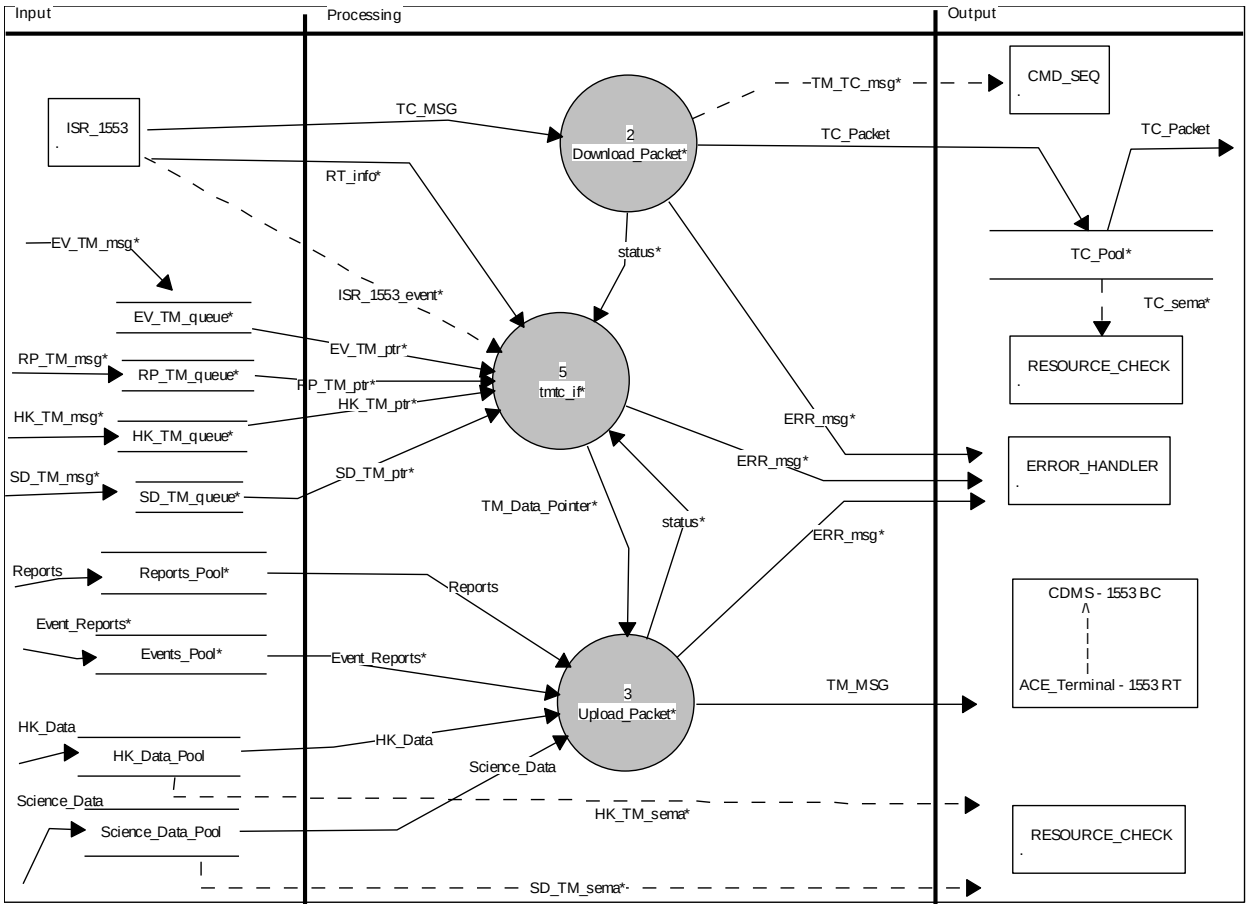

Figure 9.1-5 Function Decomposition of module TMTC

9.1.5 OBS Architecture: LS

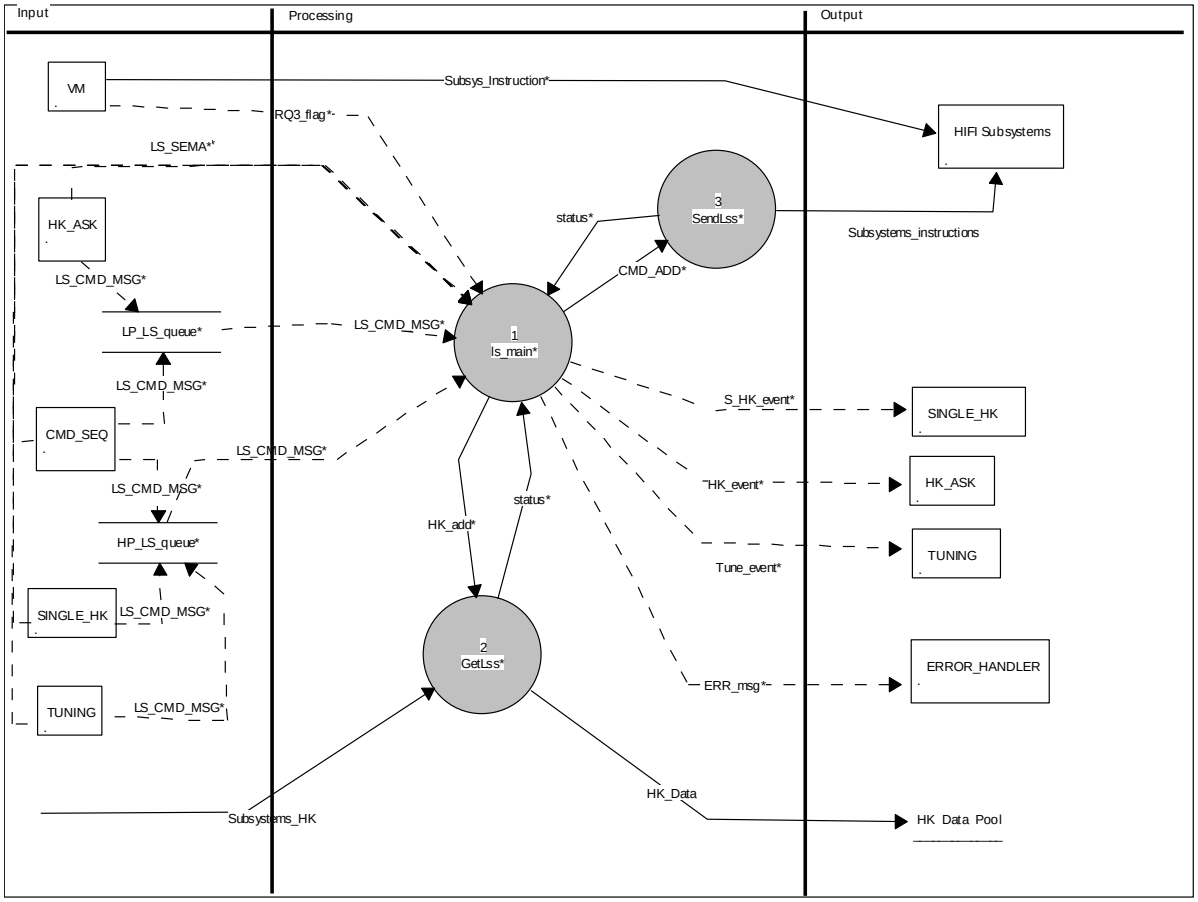

Figure 9.1-6 Function Decomposition of module LS

The LS Task (together with the VM Task) is in charge of transmitting commands to the subsystems. The actual timing of the commands transmission with this task is not predicable due to the multitasking nature of the OS; a jitter of few milliseconds must be taken in account.
The task can be scheduled by the HK_ASK task, the Single_HK task, the CMD_SEQ Task and the VM task via the LS_LP_queue and LS_HP_queue FIFOs, checks the commands read from the FIFO against a fixed table for special cases, checks for the availability (IRQ3_flag set) of the low speed I/F port (might be used by VM Task) and if not available suspends itself for 3(TBC) msec until the port is no more busy. The task then writes on the output port the SS command and suspends itself for 1 ms (HIFI: 2 ms if it's an HK request) to allow the 100 us transmission time and possibly the HK response word with allowed time-out. If an HK is expected/received, a signal is generated for the HK_ask task when the transaction is completed.

9.1.6 OBS Architecture: HK_ASK

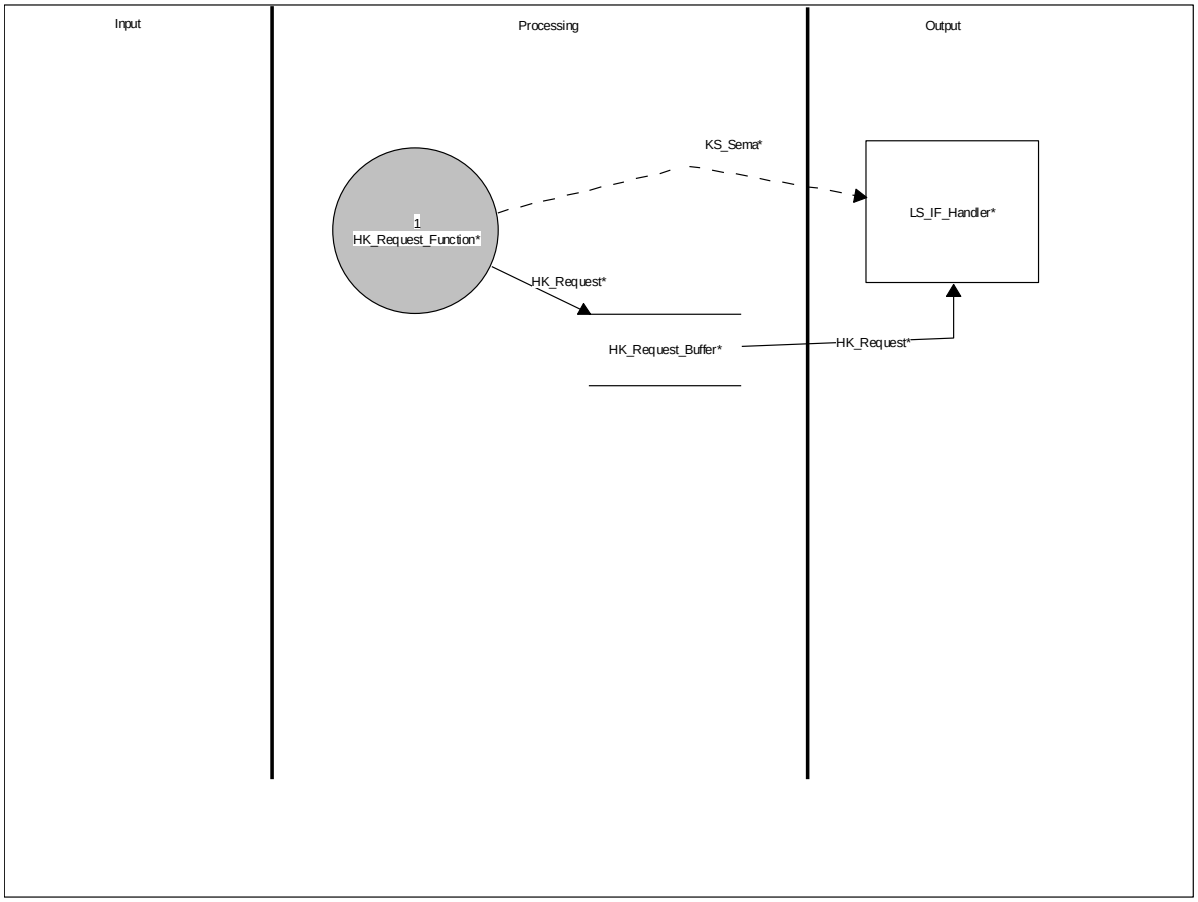

Figure 9.1-7 Function Decomposition of module HK_ask

The HK_ask task handles the periodic HK request. The OS periodically (about 5 sec) schedules the task in the running queue.
The task waits for the timer-driven semaphore HK_REQ_SEMA and checks if hk transmission is enabled (from CMD_SEQ task).
Then reads a table of SS elementary commands, writes the commands on the Low Speed I/F command buffer (HK_LS_QUEUE) and waits for task LS signal that all the answers are ready. When all requested Hk have been acquired, it sends a msg to TM_TC task into the Fifo HK_TM_QUEUE and requires a free data block from HK_POOL, where it writes the received HK data (HIFI: During the periodic hk time, task HS is appending to the data block the HK data coming from HSS).
The scheduling period of the task is set, enabled/disabled by DPU internal commands.

9.1.7 OBS Architecture: HS0

This task collects science and HK data on the high speed I/F and stores them in the HK buffer.
The data on the high speed I/F are temporary stored on four 8Kwords (4Kwords in the AVM) deep HW FIFOs: the "half FIFO full" signal of each FIFO generates a HW interrupt (IRQ 0). This interrupt is served by a dedicated Interrupt service routine (ISR0) which runs with the priority assigned to the Interrupt and raises the OS Event necessary to start the HS task operations.

Due to the asynchronous operation of the FIFOs, the actual timing of the incoming data is lost and no cause/effect between commands (on low speed I/F) and received data (on high speed I/F) is possible, at least in a simple efficient and reliable way.
The HS task writes the FIFO data onto
TO BE MODIFIED!!

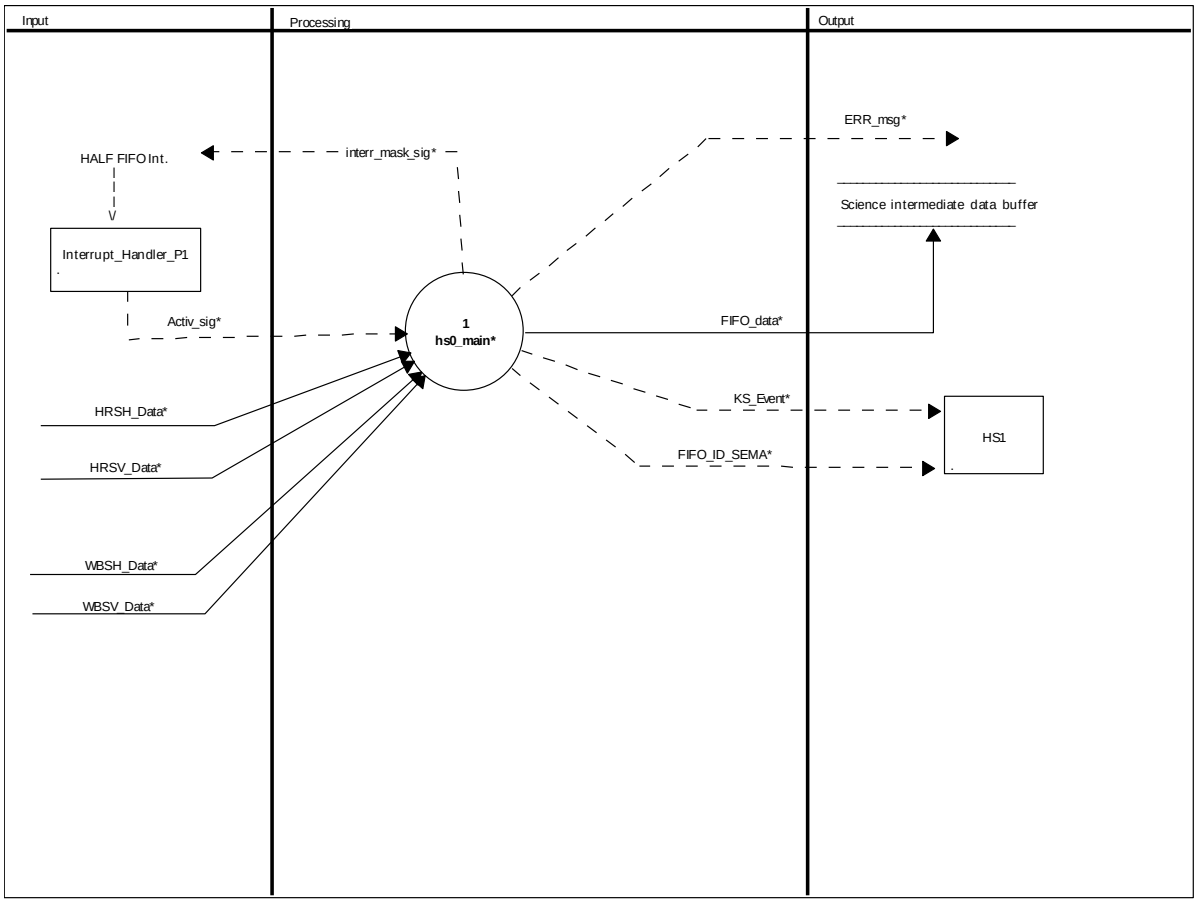

Figure 9.1-8 Function Decomposition of module HK_ask

9.1.8 OBS Architecture: HS1

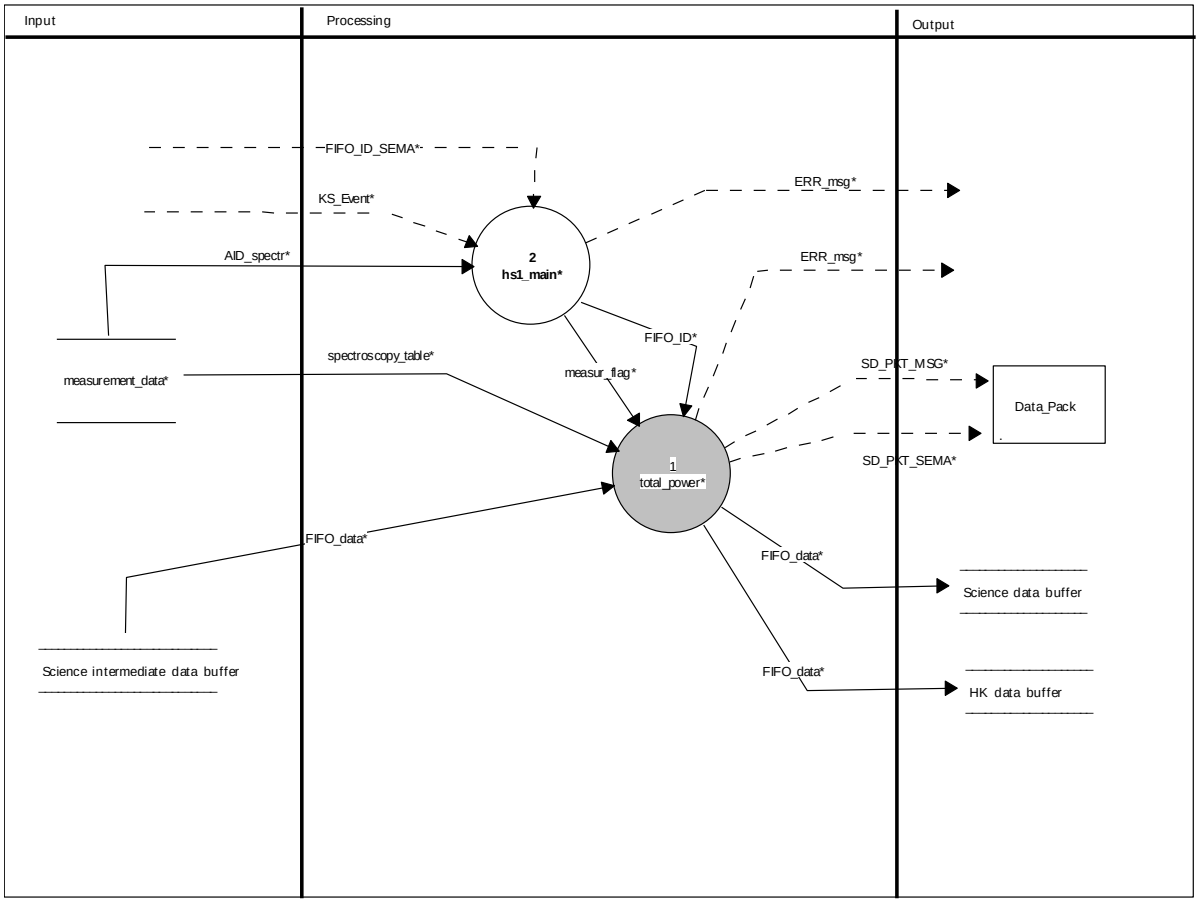

Figure 9.1-9 Function Decomposition of module

the Science Data Buffer, and puts a message with the pointer to the written record in the SD_TM_queue.
In the case of HIFI, the HS task performs also the following operations:
- processing (coaddition) of science data;
- acquisition of the high speed housekeeping data, which are transmitted on the High speed interface after the science data. These data are written on the HK data buffer (HK_Data_Pool) in the position indicated by a pointer included into the HK messages stored in the HK_TM_queue and readable by the HS task.

NOTE: the buffers which store SD and HK data have been implemented as Virtuoso Memory Pool blocks. The communication between the HS task and the TCTM task has been implemented via a Virtuoso FIFO object: once a frame is ready for TM, this function prepares a message containing the POINTER to the buffer and other data that must be written in the TM packet header, and sends it to 'tc_tm' task via SD_TM_QUEUE Virtuoso FIFO. In this way the only data that are moved across the system, are the pointers to the frame buffers.
In the case of HK, data are just written into the proper buffer, but the task which actually delivers HK packets to TMTC is the HK_ASK task.

9.1.9 OBS Architecture: Data Pack

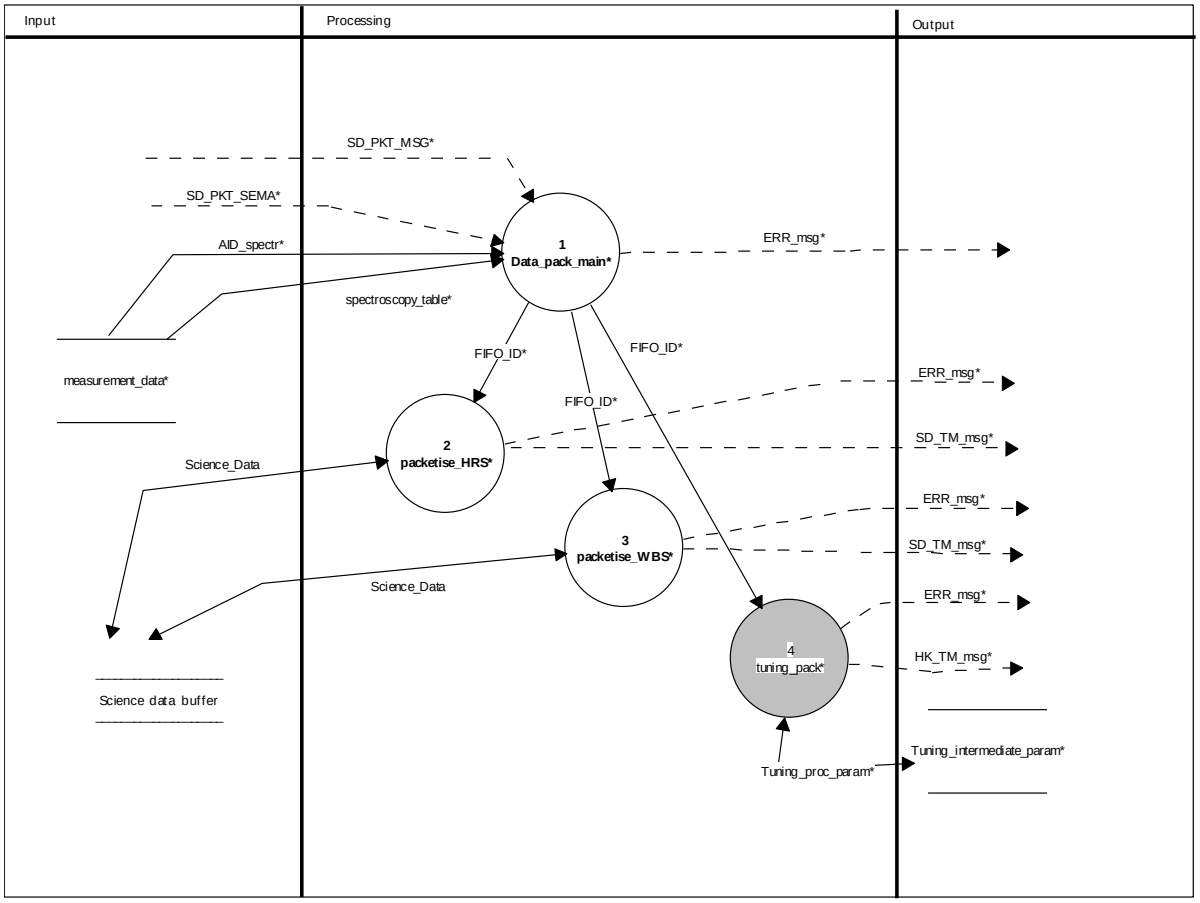

Figure 9.1-10 Function Decomposition of module HK_ask

9.1.10 OBS Architecture: HK_MONITOR

This task is foreseen mainly to limit-check the Hk data stored in the HK pool.
Not available for AVM. Requirements for the task still to TBD.

9.1.11 OBS Architecture: Interrupt_Handler_ISR2

Assembler routine needed by VIRTUOSO to handle the DPU IRQ2 hardware interrupt associated with Subfr_Sync_Int. At the receipt of the HW interrupt it raises the VIRTUOSO event ISR_1553_event.

9.1.12 OBS Architecture: Interrupt_Handler_ISR0

Assembler routine needed by VIRTUOSO to handle the DPU IRQ0 (lowest priority) hardware interrupt associated with the half-full FIFO status. At the receipt of the HW interrupt it raises the VIRTUOSO event HS_Event.

9.1.13 OBS Architecture: Interrupt_Handler_ISR3

Assembler routine needed by VIRTUOSO to handle the DPU IRQ3 hardware interrupt associated with the HW Timer. At the receipt of the HW interrupt it raises the VIRTUOSO event VM_Event.

9.1.14 OBS Architecture: RESOURCE_CHECK

Low priority task used both to have an indication of the CPU load and to monitor the filling level of the OBS resources. It is executed when no other task is active.
The most useful OBS resources shall be associated to semaphores (TBC, may be simple counters put in global variables) that are incremented each time a new record is written in the resource and are decremented when a record is read). These semaphores measure the filling level of the resources, which shall be considered as part of the OBS housekeeping data.
The RESOURCE_CHECK task first reads the semaphores and puts the levels into the HK packet and then starts a simple loop which is used to monitor the CPU load (the actual load level as well as the highest and lowest load levels shall be included in the OBS housekeeping data) .

9.1.15 OBS Architecture: VM

This task allows for the transmission of commands to the SS at a fixed time with a maximum jitter of 10us (TBC). The task, interrupt driven, is started (and possibly terminated) by a DPU/ICU internal command which enables/disables the DSP highest priority interrupt (Irq 3) driven by a 1 MHz clocked HW timer.
The task reads from a preloaded table (exec_table) the time to the next command and the command to transmit, it then sets the timer and transmits the command to the SS.
In order to avoid collision on the low speed I/F with the LS_Task, a special (internal) command is foreseen to lock/unlock (setting the IRQ3_flag) the low speed I/F. The locking command will precede the SS commands of at least 100 us in order to allow for the possible contemporary (just started) transmission of a command via the LS_Task.
To start VM the CMD_SEQ task disables the IRQ3, locks the timer and sets it to raise the next interrupt after few msec. Then the IRQ3 is enabled again. When the interrupt is raised, the VM task is started by the Interrupt service routine ISR3. The pointer to the exec_table containing the VM code to be executed (program counter) is read in a global variable filled in by CMD_SEQ.
The VM task aborts itself when the END (end of program) opcode in the exec_table is reached. VM is a state machine running into the whole system in a quite autonomous way.

9.1.16 OBS Architecture: SIMULATE_SCIENCE

This task is used for debugging purposes: it simulates the generation of the events associated to the FIFO Half-full interrupts, when no subsystems (or subsystems simulators) are usable for testing. The simulation is implemented as follows:
- it disables the FIFO half full interrupt (IRQ3)
- it loads the science dummy (fixed) values in the memory locations dedicated to the HW FIFO simulation;
- it redirects the High Speed memories addresses and the HW FIFO status registers to the new memory locations;-
- it sets an internal timer to the requested data acquisition frequency;

- at each time tick, it writes the dummy data in the simulated status registers and sends a signal to simulate the interrupt.
The task is scheduled by CMD_SEQ task when a command for the activation of the simulated data is received.

9.1.17 OBS Architecture: TUNING

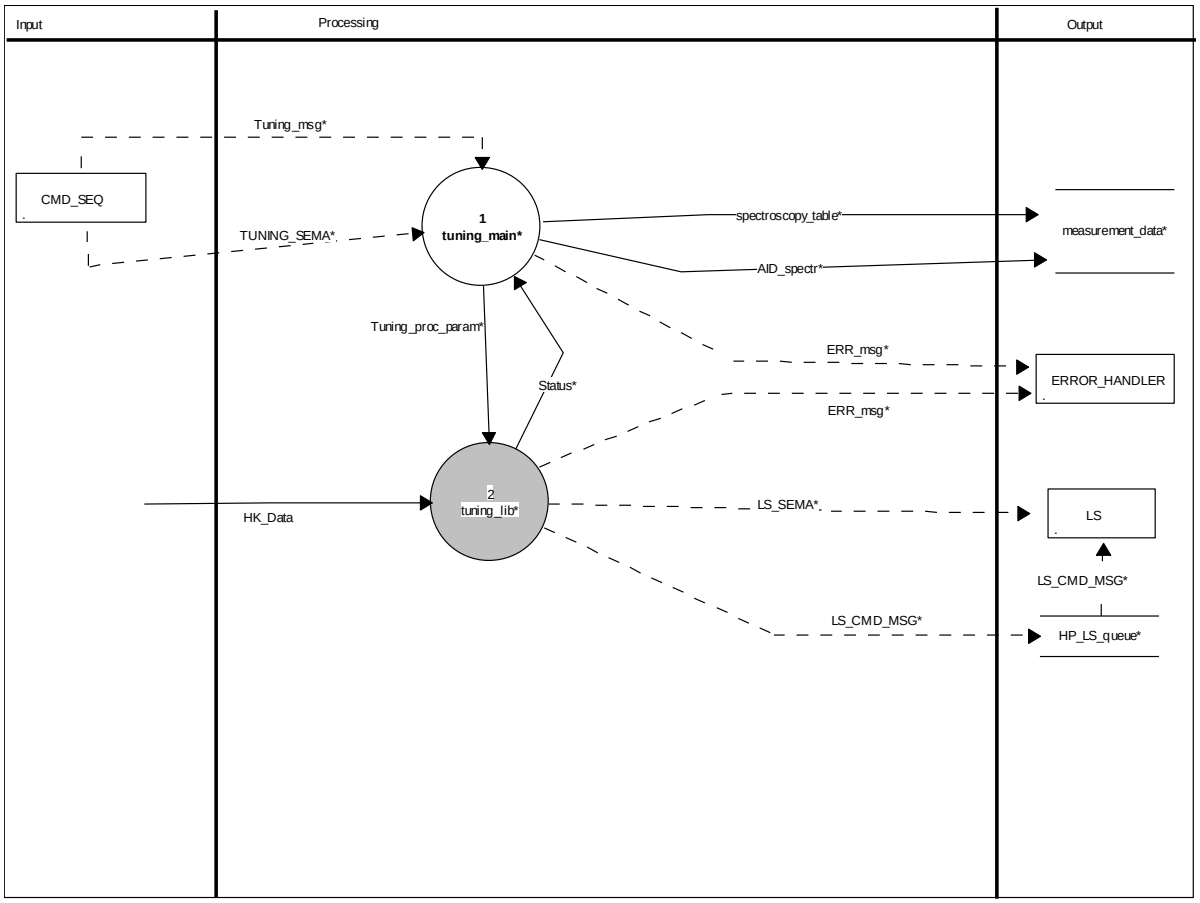

Figure 9.1-11 Function Decomposition of module Tuning

9.2 Memory organization and source code

The On-Board Software (OBS) program is stored in EEPROM Memory area. The EEPROM area containing the OBS program is shared in 256 programmable pages of 1024 x 32 bits and the same page size is used to share the free area in Data Memory for OBS uploading by MilBus 1553 but in this case the available pages are 512. This size of 1024x32bits allows to optimise the Cyclic Redundancy Check Code (Frame Check Sequence) limiting the encoded block of less 32768bits. In this way the FCS has the capabilities to maximize the error detection.
Considering the uploading of the OBS via MilBus 1553, 18 Telecommands packet are required to upload a Data Memory page.
On top of the page is defined a Header of 7 words x32bits. The header contains information for program uploading and the single field will be defined in this section. The page space available to store the OBS program is 1017 words x32bit. In EEPROM space the OBS instruction will be memorized. A DSP instruction size is 48bits and 6bytes are required. In order to save space in EEPROM, two DSP instructions are stored in 3 Data memory cells 32 bits wide.

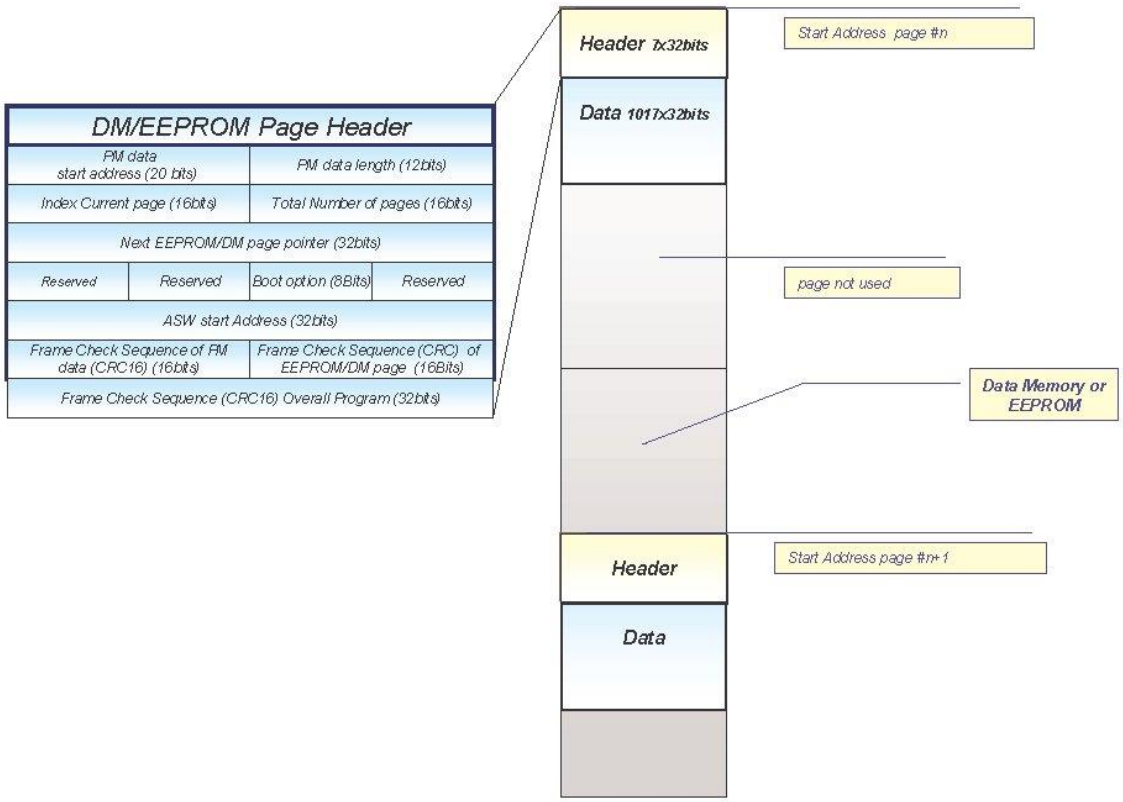

Figure 9.2-1, EEPROM/DM Pages in the DSP Data Memory space

The EEPROM / DM header fields shall be as follow:

- *PM segment start address pointer (20bits)*: It is Program memory pointer to copy the OBS data inside the current page to Program memory
- *PM Length (12bits):* Length of the data to be copied in Program memory
- *Index of the current page (16bits):* The OBS program is shared in EEPROM pages numbered in progressive order. This field indicates the number of the current page.
- *Number of Pages (16bits):* It is the total number of the pages required for storing the OBS
- *Next EEPROM / DM page pointer:* It is the address of the next OBS page in the EEPROM or DM. This pointer allows to select the next page in EEPROM / DM to be uploaded in Program Memory
- *Boot Option Flag (8bits):* It allows to select two option: Boot from primary partition or Boot from secondary partition. This filed is read for the first and last pages. In all other pages the filed is ignored.
- *ASW start address (32bits):* Application Software entry point
- *Frame Check Sequence PM page (16bits):* Cyclic redundancy code of the Program memory data in the page
- *Frame Check Sequence EEPROM /DM page:* Cyclic redundancy code of the EEPROM /DM memory page
- *Frame Check Sequence Overall Program (32bits):* Cyclic redundancy code of the OBS program

Byte #4	Byte #3	Byte #2	Byte #1
PM Data start address pointer (20bits)		PM Data length (12 bits)	
Index of Current Page (16bits)		Total Number of Pages (16bits)	
next EEPROM/DM page pointer (32bits)			
Reserved		Boot options Byte (8bits)	Reserved
ASW start address (32bits)			
Frame Check sequence of the PM Data (16 bits)		Frame Check sequence of EEPROM/DM Page (16 bits)	
0x0000		Frame Check Sequence Overall Program (CRC16)	

Table 9.2-1, EEPROM/DM header (first seven words of each page)

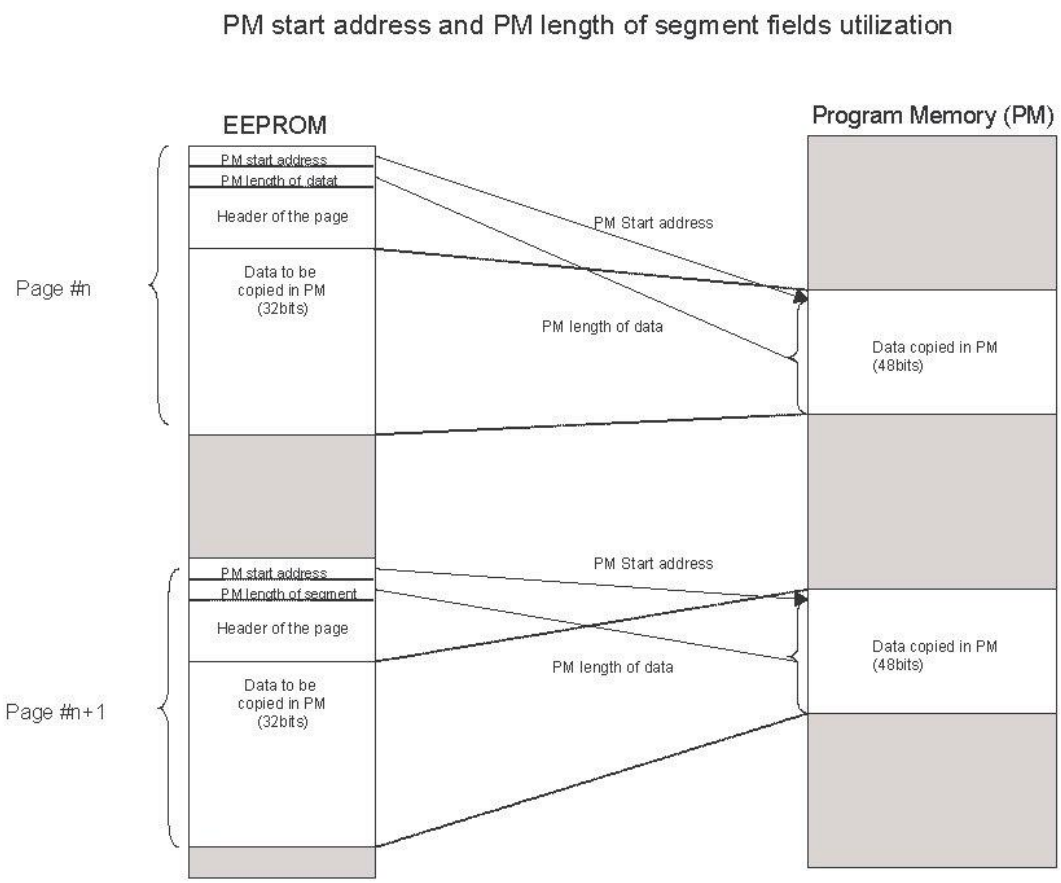

Figure 9.2-2, PM Start Address and PM length header fields utilization

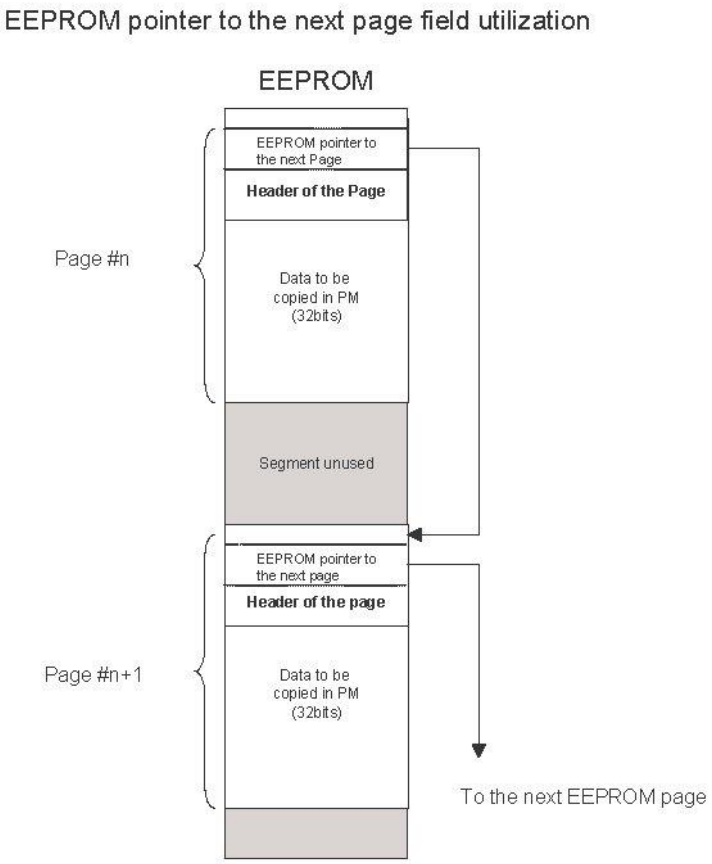

Figure 9.2-3, "Pointer to the next EEPROM page" header field utilization

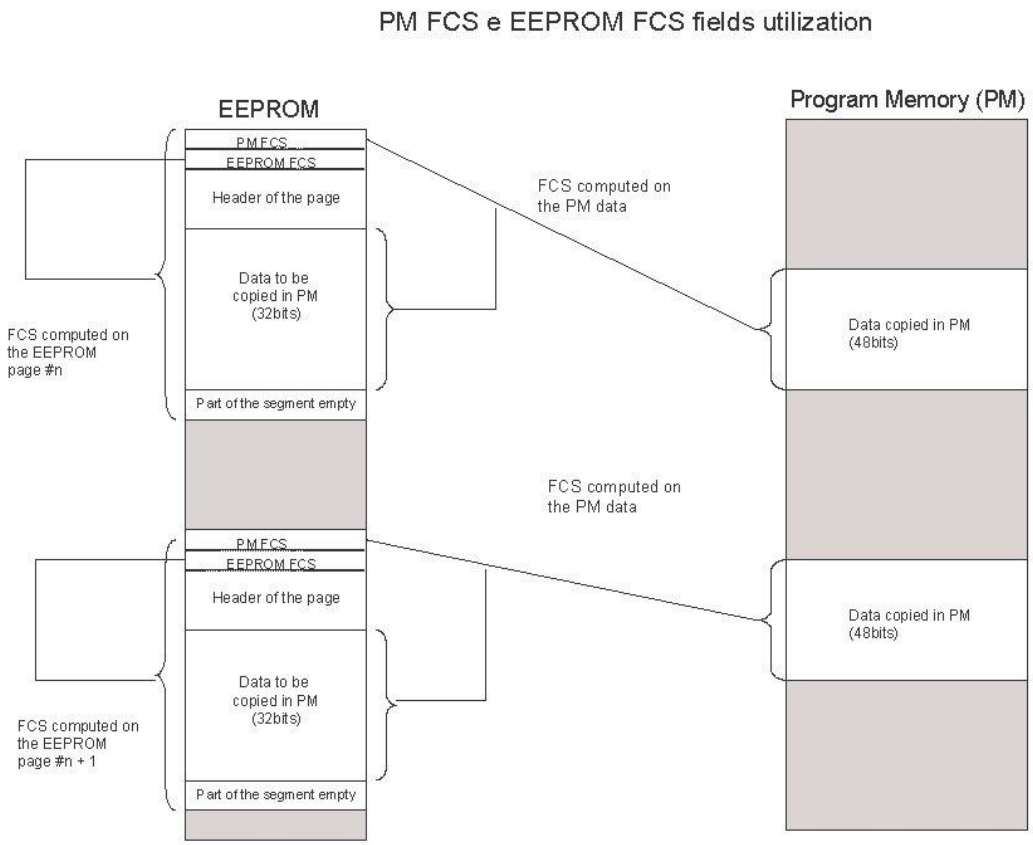

Figure 9.2-4, FCS Header field utilization: The boot software check the FCS of the EEPROM page and the FCS of the data to be written in Program Memory

The EEPROM memory should be formatted in two partition.
Boot Software allows to decrease the risk during OBS maintenance by using the Primary and Secondary partition.
Before of updating the OBS is possible to write only secondary partition and booting the new image OBS; the original image will be unchanged in the primary partition.
New OBS image can be also uploaded via MilBus 1553. In this case if the OBS is bigger then half EEPROM size some of the pages must be shared between the two partitions.

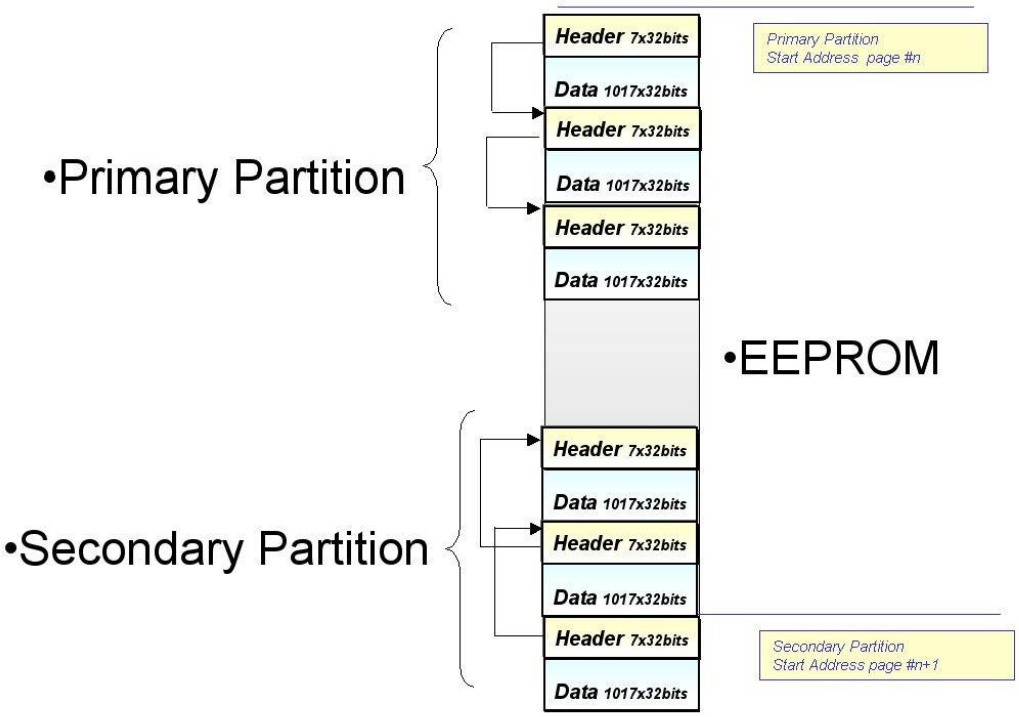

Figure 9.2-5, EEPROM Primary and Secondary partition

9.3 Program Memory Segmentation

The Program Memory is segmented in 512 segments/pages of 512x48bits in analogue way to the EEPROM and DM. The only difference concerns the words length 48bits instead 32bits. The segmentation allows a more simple test philosophy only. When a single or more memory cells are corrupted the related segment will be declared corrupted and not used. This method avoids to transmit information for all the corrupted cells and the information concerning the segment in failure is only transmitted.
The segmentation don't limit the users management of the Program Memory in term of unused cells. Two or more DM/EEPROM segment could be copied in the same PM segment if the space is available and all the PM space can be utilized.

9.4 OBS Operations

When the ICU is switched on, the BSW is copied from PROM to PM and run.
The details of the boot procedure can be found elsewhere (see **Error! Reference source not found.**, **Error! Reference source not found.**); here we simply note that after all the tests are carried out, a (5,1) event is generated and the boot enters an infinite loop waiting for a TC.
The contents of the generated event are described in **Error! Reference source not found.**.
In case of reception of a successful event, there are two possibilities for loading and executing the OBS:

1. using the image resident on the EEPROM on-board, see section 9.4.1
2. loading a new image via standard TCs, see section 9.4.2.

9.4.1 Running the EEPROM-resident OBS

The OBS is resident in EEPROM. Once the (5,1) event (with no errors reported) is received, the command **"HIFI_Force_bootpartition"** described in **Error! Reference source not found.**, section 4.3.14.2, can be sent to the ICU.
Upon receipt of this TC, the BSW copies the OBS from the EEPROM partition specified in the TC to PM and jumps to the start location of the OBS in PM; at this point the OBS starts running.
If the ICU is connected to the CDMS simulator or SCOS2000, HK packets will be received (SID 0x404 for nominal HK packets and SID 0x01 for Essential HK packets). This can be considered as the confirmation that the startup procedure has been successfully completed. See section **Error! Reference source not found.** for a complete descrition of the power on procedure.

9.4.2 Loading the OBS via telecommands with BSW

In the following the procedure for uploading the OBS in case of testing activities on ground is described. The actual procedure to be used during flight operations is still to be defined and will imply the use of the Software management Facility provided by ESA.

Once the BSW puts the ICU in a wait state, it is possible to uplink from SCOS2000 a new image of the OBS using standard TCs.
Three steps are necessary to perform the full operation:

1. It is necessary to prepare the Telecommands for uploading the new OBS image: the C program **TCGen** provided by CGS is available under Windows to translate the OBS image into a list of TC (6,2) ready to be sent to the ICU. The ADI21020 C Compiler must also be installed, since TCGen uses some C-tools (like cdump).
   The command to invoke the procedure is:

   >tcgen –i ***segfile.txt*** –p ***pagefile.txt*** –f ***path/OBS.EXE*** –a 0x400 –o ***path/suffix*** –m 0 > ***name output directory***

   where:
   - The *segfile.txt* file contains the list of memory segments (one per line) defined in the ICU program memory and reported in the architecture file hifi.ach; typically the segments are

seg_rth, seg_init and seg_pmco. The segfile.txt file used for generating the OBS version 3.2 TC set is reported in Appendix A

- The *pagefile.txt* file contains the list of memory pages to be avoided (it can be empty).
- *OBS.EXE* is the executable file as produced by the compilation of the OBS code.
- *Path* is the directory where the output TCs will be stored ;
- *Suffix* is a string that will be attached to the TC file names: the output files will be named *suffix*TCnnnnn.dm where nnnnn is a count number.

2. It is necessary to prepare the CDMS for the commands reception. On the PC hosting the CDMS simulator:
   a. Click on icon CDMS_SIM
   b. On the "Select Buslist" button, select the HIFI_Nominal buslist
   c. Click on Launch Router Command Interfac: set the IP address and the port number:
      IP address = <address of the router machine>
      Port: 9877
   d. Click on Connect
   e. On the "Select Command to send" option select NAME_CLIENT; write "hifi" and click Send Command
   f. On the "Select Command to send" option select ADD_CLIENT, write "400" and click Send Command
   g. Click on Close Without Sending
   h. Click on Start/Stop BC button

   At this point the CDMS is ready to accept the TCs.

3. The set of TCs containing the image of the can be uplinked using the "**ObswLoader**" script. The script loads TCs from a local directory on the Router machine and sends them to the CDMS that, in turn, sends them to the ICU. The following syntax should be used to invoke the script.

   >ObswLoader –dpu –apid 1024 –interval ***XXX path***/*Tc*.dm

   where ***path*** is the directory that hosts the telecommands prepared with the TCGen program, and *XXX* is the interval in milliseconds for the dispatch of subsequent TCs to the CDMS. Clearly, the dispatching interval should match the capabilities of the buslist currently running on the CDMS. For fast uploads a dedicated buslist has been prepared that allows the CDMS to send to the ICU a maximum of 20 TC/s; using this buslist allows to invoke the ObswLoader script with an interval parameter of 50 (milliseconds). If one uses the nominal buslist where only 2 TC/s can be uplinked, then the interval parameter should be set to 500.

Once all TCs have been sent, it will be necessary to send the **"Load TC and boot"** TC (see **Error! Reference source not found.**, section 4.3.14.3) from SCOS2000 to command the BSW to copy the full image from DM to PM and start the application program.

To copy the loaded OBS into the onboard EEPROM an OBS dedicated TC shall be issued. This TC is described in and **Error! Reference source not found.**, section 4.3.14.4. The overall EEPROM write procedure lasts for <=20secs.

9.4.3 Loading and patching the OBS via telecommands at runtime

A new version of the OBS can be uploaded and started also while an older version of the OBS is running. This can be made in two ways: by **loading** a new version of the OBS or by **patching** a previously existing OBS version. In the loading procedure the entire new OBS code is passed to the existing OBS version via a TC sequence. In the patching procedure only the difference between the currently running version and the new version of the OBS is loaded via a TC sequence.

In the following, after a general presentation of how the procedures work, we summarise the steps to follow to realise loading and patching. The way how the steps are implemented also depends on the auxiliary packages and on the operating environment. Therefore we also present indications on how the steps can be implemented in two different operating environments.

9.4.3.1 OBS loading

The OBS code is stored in the ICU PM, starting at address 0. It does not occupy the whole PM. More precisely the OBS up to version 4.3 occupies far less than 0x20000 PM words while the PM is 0x7ffff words long. Therefore a new OBS copy can be stored and modified directly in the high part of the PM without overwriting the running OBS, which is stored in the low part of the PM.

In order to load the new OBS the user has to prepare a sequence of *HIFI_load_PRAM* TCs to command the running OBS to build the new version of the OBS in the high PM, starting at a specified address (high_PM_address). The high_PM_address should be high enough that the running OBS is not corrupted by the copy of the new one: for this purpose, address 0x3ffff is compatible with any OBS version.

Once the OBS copy has been constructed in the high PM, the user should issue the command *HIFI_copy_mem_to_low*. This command has two parameters: OBS_destination and OBS_copy_len. When this command is received, the OBS takes the following actions:

1. it copies the procedure that handles the TC into the 100 PM words preceeding address OBS_destination (necessarily equal to the high_PM_address used in the previous step) and passes the control to this code;
2. the procedure copies OBS_copy_len PM words starting from address OBS_destination (high PM) into a PM area of the same length starting at address 0 (low PM);
3. when the copy is complete, the procedure invokes an *HIFI_reset* command.

As a result, if a copy of the OBS was prepared in the high PM starting at address high_PM_address, when this command is issued with OBS_destination = high_PM_address and provided that OBS_copy_len is higher than the number of words of the OBS version stored in high PM (a value of 0x20000 will always do) the copy of the new OBS is moved from the high PM to the low PM and re-started.

It is higly recommended to check that the OBS copy has been correctly constructed in the high PM before issuing the *HIFI_copy_mem_to_low* command. This can be done by issuing a proper sequence of *HIFI_check_memory* and *HIFI_check_PM_memory* commands.

Therefore we can summarise the steps for performing the OBS **loading** procedure as follows:

L1. Prepare a sequence of *HIFI_load_PRAM* TCs that constructs the new OBS version in the ICU high PM.

L2. While the OBS is running on the ICU, issue the sequence of TCs produced at step L1.

L3. Issue a sequence of *check_memory* commands in order to be sure that the copy has been correctly constructed. Abort the overall procedure in case the copy is damaged.

L4. Issue the *HIFI_copy_mem_to_low* TC.

9.4.3.2 OBS patching

The procedure for the OBS patching is slightly different. The difference is in how the new version of the OBS is constructed in the high PM. While in the loading procedure the user has to prepare a sequence of TCs that construct in high PM a whole copy of the OBS, in the patching procedure the user firstly makes a copy of the running OBS version in the high PM and next issues to the OBS a sequence of TCs that changes that copy into the newer version, i.e. the TCs have to carry only the differences between the running copy and the new copy.

The copy of the running version can be constructed by issuing the *HIFI_copy_mem_to_high* TC. This command is very similar to the HIFI_copy_mem_to_low command except that it works in the other direction, i.e. it copies from the low PM to the high PM: indeed they are both implemented by means of the *HIFI_copy_memory* command by specifying a different direction (1 for low to high and 2 for high to low).
In addition, this command does not perform a reset at completion.
The command has two parameters: OBS_destination and OBS_copy_len.
When the command is issued, the OBS will copy a block of OBS_copy_len PM words starting from address zero into a block of the same length starting at address OBS_destination. In this way, provided that OBS_copy_len is high enough (a value of 0x20000 will always do) the running OBS is copied into the high PM.

We can summarise the steps for performing the OBS **pacthing** procedure as follows:

P1. Prepare a sequence of *HIFI_load_PRAM* TCs that turn the current OBS into a new OBS version.

P2. While the OBS is running on the ICU, issue the TC *HIFI_copy_mem_to_high*.

P3. Issue the sequence of TCs produced at step P1.

P4. Issue sequence of *check memory* commands in order to be sure that the copy has been correctly constructed. Abort the procedure in case the copy is damaged.

P5. Issue the TC *HIFI_copy_mem_to_low*.

9.4.3.2.1 Example 1: Implementing a patching at the IFSI premises.

To clarify the procedure and illustrate how the procedures has to be customized for the existing operating environment we report here a detailed description on how the OBS patching is performed and tested in the operating environment used at the IFSI premises.
In the example, we will pacth OBS release X into OBS release Y.
We assume that the high_PM_address is 0x3ffff.

Implementation of step P1.
At IFSI the OBS Management facility is not available. Therefore the sequence of TCs is prepared by using a C program internally developed. The program is called *genera_TC_patch* and can be compiled and executed on any PC. It requires two input files containing the ascii dump of the two versions of the OBS executable. Both files can be produced by the ADI21020 compiler using the CDMP directive. The *genera_TC_patch* program by default assumes that the high_PM_address is 0x30000. In case the user wants to specify a different addres (like we want in this example) the program accepts an option in the form –o offset where offset is a HEX offset with respect to the default address: therefore, in order to provide the TC sequence for patching at address ox3ffff we need to invoke the program with a –0 oxffff option. Once the two input files are stored in the same directory where the program is located, the program can be executed by means of the following command

>genera_TC_patch p OBS_X.fil -n OBS_Y.fil –o 0xffff

The program output is a sequence of *HIFI_load_PRAM* commands that are stored in the sub-directory TC_for_patching. The number of provided TC packets depends on how much OBS.Y is different from OBS.X. If the two differ in one data only (e,g, the initial value of a global value or a table entry) a couple of TCs may be sufficient. If the two are very different the same number of packets as a normal full load could be required. The program outputs (on the screen) also the length, the starting address and the checksum of the three segments into which the code is divided, which are the seg_rth, the seg_init and the seg_pmco. These data are useful to contruct the check commands to be used in step P4.
In the following an example of the output of the program is provided. It has been obtainedpreparong the patches for the versions 4.3.1 ontop of 4.3.

```
>genera_TC_patch.exe -p OBS4_3.fil -n OBS4_3_1.fil -o 0xffff

Opening OBS4_3.fil
        Time of image compilation : Tue Nov 14 11:28:24 2006
        Found segment seg_rth
                Start address 0
                Size 0x100
        Found segment seg_init
                Start address 0x4000
                Size 0x11a7
        Found segment seg_pmco
                Start address 0x6000
                Size 0x11eae
        Writing temp file
                Processing section: 'seg_rth'
                Processing section: 'seg_init'
                Processing section: 'seg_pmco'
Opening OBS4_3_1.fil
        Time of image compilation : Tue Nov 14 16:17:54 2006
        Found segment seg_rth
                Start address 0
```

```
                Size 0x100
        Found segment seg_init
                Start address 0x4000
                Size 0x11a7
        Found segment seg_pmco
                Start address 0x6000
                Size 0x11eae
        Writing temp file
                Processing section: 'seg_rth'
                Processing section: 'seg_init'
                Processing section: 'seg_pmco'
Processing 'seg_rth'
                 crc on the segment: 0xc65e
Processing 'seg_init'
                 crc on the segment: 0x4987
Processing 'seg_pmco'
                 crc on the segment: 0xbf2e
```

Implementation of step P2.
Once OBS.X is running the TC *HIFI_copy_mem_to_high* is issued. The parameters of this command are OBS_destination = 0x3ffff, OBS_copy_len = 0x20000. The second parameter has to be at least equal to the actual length (in number of PM words) of the OBS.X code. The value 0x20000 is a safe value, since it is much higher than any allowed OBS version length (the maximum allowed length is defined by half the EEPROM size).
The execution of the *HIFI_copy_mem_to_high* takes a few seconds and is terminated when a command execution success TM packet (1,7) is received.

Implementation of step P3.
To send the patching TCs an automatic procedure is needed. At IFSI premises this can be achieved by running the *ObswLoader* procedure on the machine where the router is running (i.e. the SCOS2000 machine). The procedure is the same used to upload the TCs when the BSW is running:

>ObswLoader -apid 1024 -dpu -patch -interval 250 ***path***/*.tc

The options have the follwoing meaning:
-apid 1024: it instructs the OBS loader to generate packets with the HIFI apid.
-dpu: it tells the OBS loader that the commands are directed towards the ICU.
-patch: it is needed to specify to the OBS loader that the word dimension is 48 bits (that of the PRAM) and not 32 bits (that of the DRAM).
-interval 250: it sets the time interval between to successive command issues to 250 msec which is the maximum tolerable rate for the OBS.
The last parameter is the directory and the files to upload.

After issuing the command just described the SCOS machine will pass the sequence of commands to the CDMS which turns the commands to the OBS: on the CDMS simulator the sequence of commands being issued shall be seen. No TC acceptance reports will be generated because the ObswLoader procedure sets the corresponding bits in the TCs to 0. If there are problems in the ingestions of the TCs, TC execution failure reports (1,8) are generated. In this case the upload procedure shall be stopped and repeated from the beginning.

The time necessary to run the procedure depends on how many patching TC packets are needed and on selected time interval.

Implementation of step P4.
This step can be done by preapring two TCs. One is a HIFI_check_memory command that should be used to check the segment seg_init. The data to construct this command are produced by the program genera_TC_patch (see the example above). For this segment the program reports an init_offset, a init_len and a init_checksum. The user shall prepare a HIFI_check_memory command with the following parameters: OBS_mem_id = 0 (specifies the PM) OBS_mem_ start = 0x3ffff + init_offset (tells where the area to check starts) OBS_mem_length = init_len. After issuing this TC the user should check the relative report and verify that the reported crc is identical to the one produced by genera_TC_patch (i.e. to init_checksum). The second command is used to check the contents of the seg_pmco segment. Again the command is constructed on the data produced the the genera_TC_patch program which reports the segment offset (pmco_offset) len (pmco_len) and checksum (pmco_checksum). The user shall prepare an HIFI_check_PM_memory command with the follwoing parameters: HIF_check_start = 0x3ffff + pmco_offset (tells where to start the check) HIF_check_end = 0x3ffff + pmco_offset + pmco_len –1 (tells the last word to check) and HIF_chck_crc = pmco_checksum (tells the expected checksum). After issuing the command the user should receive an execution succes TM packet (1,7) confirming that the expected checksum was indeed obtained. If an execution failure (1,8) TM packet is obtained the procedure should be aborted.

Implementation of step P5.
Issue the TC HIFI_copy_mem_to_low TC. The parameters of this command are OBS_destination = 0x3ffff, OBS_copy_len = 0x20000. The second parameter has to be at least equal to the actual length (in number of PM words) of the OBS.X code. The value 0x20000 is a safe value, since it is much higher than any OBS version length.
After this command has been issued the new copy of the OBS (i.e. OBS.Y) should be loaded and started. On the AVM1 at the IFSI premises a manual reset of the ICU is additionally needed due to a known problem in the ICU reset.

9.4.3.2.2 Example 2: Implementing patching at SRON.

We now report a description on how the patching could be realised with the OBSW Managment facility. The two environment dependent steps are P1 and P3 and are discussed in the following. The other steps are identical.

Implementation of step P1.
When the OBSM is allowable it can be used to produce the TC patching sequence from a version of the OBS.X and of the OBS.Y executables in the ICD14 format.

Implementation of step P3.
The OBSM can be used to issue the sequence of TCs produced at step P1.

10 SUMMARY OF HK TELEMETRY DATA

10.1 Summary of HK and diagnostic telemetry packets

An overview of the housekeeping and diagnostic packets is given in Annex 1 section 1.8 and 1.9

10.2 Synthetic parameters

The synthetic parameters are given in Annex 1 section 1.5

10.3 Event reports

Enent reports are given in Annex 1 section 1.8

10.4 On-ground limit check information

The applicable ranges are indicated in Annex 1 section 1.6

11 SUMMARY OF INSTRUMENT TELECOMMAND DATA

11.1 Summary of telecommand packets

HIFI is controlled by the following telecommands:

- HIFI_force_boot
- HIFI_load_boot
- HIFI_eeprom_write
- HIFI_mem_check
- HIFI_connection_test
- HIFI_Set_OBS_ID
- HIFI_notify_PDU_status
- HIFI_Housekeeping_on
- HIFI_Housekeeping_off
- HIFI_non_periodic_hk_FCU
- HIFI_non_periodic_hk_LCU
- HIFI_Limit_checking_on
- HIFI_Limit_checking_off
- HIFI_Configure_FCU
- HIFI_Config_HRS_H
- HIFI_Config_HRS_H_att_lo
- HIFI_Config_HRS_H_blocks
- HIFI_Config_HRS_V
- HIFI_Config_HRS_V_att_lo
- HIFI_Config_HRS_V_blocks
- HIFI_Configure_WBS_H
- HIFI_Configure_WBS_V
- HIFI_Configure_LCU_ch1a
- HIFI_Configure_LCU_ch5a
- HIFI_HL_switchon
- HIFI_HL_heater
- HIFI_LCU_Single
- HIFI_FCU_parameter_scan
- HIFI_config_spectroscopy
- HIFI_Spectr_total_power
- HIFI_Spectr_slow_chop
- HIFI_simulate_science
- HIFI_Single_cmd
- HIFI_measure_LCU_IV

11.1.1 Use of the telecommands

11.1.1.1 Start up

Start-up of HIFI consists of the following steps:

1. Power on ICU

2. (release a command to force the boot process)
3. All ICU-Monitor parameters must be valid and not out-of-limit.
4. Release the HIFI_notify_PDU_status telecommand with HIF_FCU_S = ON
5. All FCU-Monitor parameters must be valid and not out-of-limit.
6. Release the HIFI_notify_PDU_status telecommand with HIF_LCU_S = ON
7. Power on LCU
8. TBD set of LCU-Monitor parameters must be valid and not out-of-limit.
9. Release the HIFI_notify_PDU_status telecommand with HIF_WBSH_S= ON
10. Power on WBS_H
11. TBD set of WBS_H-Monitor parameters must be valid and not out-of-limit.
12. Release the HIFI_notify_PDU_status telecommand with HIF_WBSV_S= ON
13. Power on WBS_V
14. TBD set of WBS_V-Monitor parameters must be valid and not out-of-limit.
15. Release the HIFI_notify_PDU_status telecommand with HIF_HRSH_S= ON
16. Power on HRS_H
17. TBD set of HRS_H-Monitor parameters must be valid and not out-of-limit.
18. Perform HRS FT0
19. Release the HIFI_notify_PDU_status telecommand with HIF_HRSV_S= ON
20. Power on HRS_V
21. TBD set of HRS_V-Monitor parameters must be valid and not out-of-limit.
22. Perform HRS FT0

11.1.1.2 Configure FCU

The FCU is configured as follows:

Issued telecommand	Response in telemetry
TC(8,4) HIFI_Configure_FCU_power	TM(1,1) Telecommand accepted TM(8,6) Function status report
TC(8,4) HIFI_Configure_FCU	TM(1,1) Telecommand accepted TM(8,6) Function status report
TC request non-periodic HK	TM(1,1) Telecommand accepted TM(3,25) Non-periodic-FCU HK

Prerequisites to configure the FCU:

- HI_FCU_S must be ON
- All FCU-Monitor parameters must be valid and not out-of-limit.

1. Release the command HIFI_Configure_FCU_power

Only if required. At startup the power status is:

- Mixer chains H and V on
- Upconverters H and V off

- Chopper actuator: on.

2. Immediate reaction:
   - Telecommand acceptance verification report –success
   - Function status report.

This report contains an echo of all command-parameters.

- From the next periodic HK-packet onwards:

The five status-parameter assume the commanded values.

3. Release the telecommand HIFI_Configure_FCU

4. Immediate reaction:
   - Telecommand acceptance verification report –success
   - Function status report.

This report contains an echo of all command-parameters.

- From the next periodic HK-packet onwards:
- Building-block ID assumes commanded value
- The five Mxband Monitor parameters assume the commanded value.
- The Commanded parameters have effect of the analogue monitor values.

5. For diagnostic purposes the FCU-non-periodic HK may be requested. This packet is requested as follows:

Release the telecommand HIFI_non_periodic_HK_FCU
This telecommand requests the digital housekeeping from the FCU.

6. Immediate reaction:
   - Telecommand acceptance verification report –success
   - Non-periodic FCU-HK report

This report contains the commanded parameters as received by the FCU

7. Criteria for successful configuration:

The Difference between commanded value and monitored value must not exceed TBD value. (typical 0.1 in the applicable engineering unit)
As the monitor parameters in the Function Status report can be converted to engineering values, the difference of commanded value and monitored value can be calculated by means of a derived parameter and expressed in engineering values.

Section **Error! Reference source not found.** lists which monitor parameters are influenced by the Configure FCU command.

11.1.1.3 Configure LCU

To configure the LCU the following sequence must be followed:

Issued telecommand	Response in telemetry
TC(8,4) Set to nominal	
	TM(1,1) Telecommand accepted TM(8,6) Function status report

TC(8,4) HIFI_Configure_LCU_band n

TM(1,1) Telecommand accepted
TM(8,6) Function status report

TC(8,4) HIFI_HL_switchon

TM(1,1) Telecommand accepted
TM(8,6) Function status report

Prerequisites to configure the LCU for band N:

- HI_LCU_S must be ON
- TBD LCU-Monitor parameters must be valid and not out-of-limit.
- LCU may be in nominal mode
- Band N may be active.
- Note the number of commands, rejected by LCU (Monitor parameter HL_false_cmd)

1. If the LCU is in standby : Release the telecommand to set LCU to nominal

2. Immediate reaction:
   - Telecommand acceptance verification report –success
   - HL_Nominal assumes the value NOMINAL in the next HK-report

3. Release the telecommand HIFI_Configure_LCU_band n

This telecommand contains the command-parameters listed in TBD.

4. Immediate reaction:
   - Telecommand acceptance verification report –success
   - Function status report.

This report contains an echo of all command-parameters.

- From the next periodic HK-packet onwards:
- Building-block ID assumes commanded value

5. NOT YET IMPLEMENTED: For diagnostic purposes the LCU-non-periodic HK may be requested. This packet is requested as follows: Release the telecommand HIFI_non_periodic_HK_LCU

This telecommand requests the commanded values for this band from the LCU.

6. Immediate reaction:
   - Telecommand acceptance verification report –success
   - Non-periodic LCU-HK report

This report contains the commanded parameters as received by the LCU

7. Release the telecommand HIFI_HL_switchon with the selected band.

8. Immediate reaction:
   - Telecommand acceptance verification report –success
   - HL_Channel_S assumes the value of the selected band
   - The housekeeping values reflect the commanded settings

9. Criteria for successful configuration:
   - No commands are rejected by LCU. (HL_false_cmd did not increase wrt the value in step 1)

- The Difference between commanded value and monitored value must not exceed TBD value.

11.1.1.4 Configure HRS-H or HRS-V

The HRS-configuration consists of two steps:

1. HIFI_Config_HRS_H_att_and_LO
2. HIFI_Config_HRS_H_blocks

Issued telecommand	Response in telemetry
TC(8,4) HIFI_Config_HRS_H_att_and_LO	
	TM(1,1) Telecommand accepted TM(8,6) Function status report
TC(8,4) HIFI_Config_HRS_H_blocks	
	TM(1,1) Telecommand accepted TM(8,6) Function status report

The command HIFI_Configure_HRS_H_att_and_LO passes the selected polarization, the settings of the 7 local oscillators and the settings of the 8 attenuators.

After the HIFI_Configure_HRS_H_att_and_LO a HIFI_Tune_HRS command may be issued.
The tuning leaves the spectrometer in the ultra wide mode.

The final step is the block-configuration.
In general, this may be done by the telecommand HIFI_Config_HRS_H_blocks, which passes the 8 20-bit block-settings as editable parameters.
The values of these parameter are in textual calibration sets, named after the mode they command the block into.

The procedure for HRS-V is similar to the one for HRS-H.

Prerequisites to configure the HRS-H(V):

- HI_HRSH_S (HI_HRSV_S) must be ON
- TBD HRSH(V)-Monitor parameters must be valid and not out-of-limit.

1. Release the telecommand HIFI_Config_HRS_H(V)_att_and_lo

This telecommand contains the command-parameters listed in TBD.

2. Immediate reaction:
   - Telecommand acceptance verification report –success
   - Function status report.

This report contains an echo of all command-parameters.

- Skip one HK-packet. From the next periodic HK-packet onwards:
- Building-block ID assumes commanded value

- The Commanded parameters have effect of the monitor values.

Notice that the effect will be visible in the second or the third HK-packet after the command-release

3. Tune. See section on tuning

4. Release the telecommand HIFI_Config_HRS_H(V)_blocks

This telecommand contains the command-parameters listed in TBD.

5. Immediate reaction:
   - Telecommand acceptance verification report –success
   - Function status report.

This report contains an echo of all command-parameters.

- The commanded blocks are not reflected in the periodic HK-packet. In stead, they appear in the HRS-IF power house-keeping packets, and in the start-science frame packets.

6. Criteria for successful configuration:

TBD

11.1.1.5 Configure WBS-H or WBS-V

To configure WBS-H (WBS-V) the following sequence must be followed:

The procedure for WBS-V is similar to the one for WBS-H. The WBS-V is indicated in ellipses.

Issued telecommand	Response in telemetry
TC(8,4) Configure WBS_H (V)	
	TM(1,1) Telecommand accepted TM(8,6) Function status report

Prerequisites to configure the WBS-H(V):

- HI_WBSH_S (HI_WBSV_S) must be ON
- TBD WBSH(V)-Monitor parameters must be valid and not out-of-limit.

7. Release the telecommand HIFI_Configure_HRS_H(V)

This telecommand contains the command-parameters listed in TBD.

8. Immediate reaction:
   - Telecommand acceptance verification report –success
   - Function status report.

This report contains an echo of all command-parameters.

- From the next periodic HK-packet onwards:
- Building-block ID assumes commanded value
- The Commanded parameters have effect of the monitor values.

9. Criteria for successful configuration:

TBD

11.1.1.6 Configure spectroscopy

11.1.1.7 Switch off

HIFI should not be switched off when the instrument is in the primary mode.

As the HIFI-standby mode can act as a save mode, the proper way to switch off HIFI is by the HIFI_SAVE command. Upon the receipt of this command. The ICU commands LCU to standby and FCU to band 0.

When the instrument is in standby mode any subsystem may be switched off. Before a subsystem is switched of the status should be notified to the ICU.

11.1.1.8 Spectroscopy

11.1.1.9 Tuning

Upon receipt of the Tune_HRS command the HRS-sprectrometers are tuned.
In case a spectrometer is switched off, the corresponding tune-reports will be omitted.

Issued telecommand	Response in telemetry
TC(8,4) Tune HRS	
	TM(1,1) Telecommand accepted TM(21,3) HRS-H tune report TM(21,3) HRS-V tune report TM() science data TM(1,7) Command executed

11.1.1.10 Miscellaneous

11.1.1.11 Memory

11.2 Reflection of telecommands on TM

This table shows which how the command-parameters are reflected in the telemetry. This concerns a one-to-one reflection.
The next table specifies the parameters that are affected by commands.

id	cvs_mnem	type	inter	cpc_name_mnem	pcf_name_mnem	parnam	val	tol
0115	notify_PDU_status	C						
			C	HIF_FCU_S	HI_FCU_S	HM000191	HP005197	
			C	HIF_LCU_S	HI_LCU_S	HM000194	HP006197	
			C	HIF_WBSH_S	HI_WBSH_S	HM000193	HP007197	
			C	HIF_WBSV_S	HI_WBSV_S	HM001193	HP008197	
			C	HIF_HRSH_S	HI_HRSH_S	HM000192	HP009197	
			C	HIF_HRSV_S	HI_HRSV_S	HM001192	HP010197	
0116	Configure_FCU	C						
			C	HF_CPR_MXBAND	HF_EPR_MXBAND	HM277191	HP204191	
			C	HF_CH1_DPFPP1	HF_EH1_DPFPP1	HM278191	HP179191	
			C	HF_CH2_FIF1_Drain_V	HF_EH2_D_FIF1_V	HM279191	HP180191	
			C	HF_CH2_FIF1_Drain_C	HF_EH2_D_FIF1_C	HM280191	HP181191	
			C	HF_CH2_FIF2_Drain_V	HF_EH2_D_FIF2_V	HM281191	HP182191	
			C	HF_CH2_FIF2_Drain_C	HF_EH2_D_FIF2_C	HM282191	HP183191	
			C	HF_CH2_SIF1_Drain_V	HF_EH2_D_SIF1_V	HM283191	HP184191	
			C	HF_CH2_SIF1_Drain_C	HF_EH2_D_SIF1_C	HM284191	HP185191	
			C	HF_CH2_SIF2_Drain_V	HF_EH2_D_SIF2_V	HM285191	HP186191	
			C	HF_CH2_SIF2_Drain_C	HF_EH2_D_SIF2_C	HM286191	HP187191	
			C	HF_CH2_SIF3_Drain_V	HF_EH2_D_SIF3_V	HM287191	HP188191	
			C	HF_CH2_SIF3_Drain_C	HF_EH2_D_SIF3_C	HM288191	HP189191	
			C	HF_CV1_DPFPP1	HF_EV1_DPFPP1	HM289191	HP193191	
			C	HF_CV2_FIF1_Drain_V	HF_EV2_D_FIF1_V	HM290191	HP194191	
			C	HF_CV2_FIF1_Drain_C	HF_EV2_D_FIF1_C	HM291191	HP195191	
			C	HF_CV2_FIF2_Drain_V	HF_EV2_D_FIF2_V	HM292191	HP196191	
			C	HF_CV2_FIF2_Drain_C	HF_EV2_D_FIF2_C	HM293191	HP197191	
			C	HF_CV2_SIF1_Drain_V	HF_EV2_D_SIF1_V	HM294191	HP198191	
			C	HF_CV2_SIF1_Drain_C	HF_EV2_D_SIF1_C	HM295191	HP199191	
			C	HF_CV2_SIF2_Drain_V	HF_EV2_D_SIF2_V	HM296191	HP200191	
			C	HF_CV2_SIF2_Drain_C	HF_EV2_D_SIF2_C	HM297191	HP201191	
			C	HF_CV2_SIF3_Drain_V	HF_EV2_D_SIF3_V	HM298191	HP202191	
			C	HF_CV2_SIF3_Drain_C	HF_EV2_D_SIF3_C	HM299191	HP203191	
			C	HF_CPR_CH_SINE_S	HF_EPR_CHSINE_S	HM300191	HP212191	
			C	HF_CPR_CH_LOOP_S	HF_EPR_CHLOOP_S	HM301191	HP211191	
			C	HF_CPR_CHFPG1	HF_EPR_CHFPG1	HM302191	HP213191	
			C	HF_CPR_CHFPG2	HF_EPR_CHFPG2	HM303191	HP214191	
			C	HF_CPR_CHFPZ1	HF_EPR_CHFPZ1	HM304191	HP215191	
			C	HF_CPR_CHFPZ2	HF_EPR_CHFPZ2	HM305191	HP216191	
			C	HF_CPR_CHFPP2	HF_EPR_CHFPP2	HM306191	HP217191	
			C	HF_CPR_CHFPG3	HF_EPR_CHFPG3	HM307191	HP218191	
			C	HF_CPR_CHFPP3	HF_EPR_CHFPP3	HM308191	HP219191	
			C	HF_CPR_Cal_Heater_C	HF_EPR_CS_C	HM309191	HP220191	
			C	HF_CH1_MXBIAS_V	HF_EH1_MXBIAS_V	HM310191	HP176191	
			C	HF_CH1_MX_MG_C	HF_EH1_MXMG_C	HM311191	HP177191	
			C	HF_CV1_MXBIAS_V	HF_EV1_MXBIAS_V	HM312191	HP190191	

id	cvs_mnem	type	inter	cpc_name_mnem	pcf_name_mnem	parnam	val	tol
			C	HF_CV1_MX_MG_C	HF_EV1_MXMG_C	HM313191	HP191191	
			C	HF_CPR_Chopper_Rot	HF_EPR_CH_ROT	HM314191	HP210191	
			C	HF_CH1_DPACT_C	HF_EH1_DPACT_C	HM315191	HP178191	
			C	HF_CV1_DPACT_C	HF_EV1_DPACT_C	HM316191	HP192191	
			C	HF_CPR_MXBAND	HF_DH1_MXBAND	HM001191	HP204191	
			C	HF_CPR_MXBAND	HF_DH2_MXBAND	HM035191	HP204191	
			C	HF_CPR_MXBAND	HF_DV1_MXBAND	HM084191	HP204191	
			C	HF_CPR_MXBAND	HF_DV2_MXBAND	HM118191	HP204191	
			C	HF_CPR_MXBAND	HF_DPR_MXBAND	HM167191	HP204191	
0117	Config_HRS_H_att_lo	C						
			C	HRH_switch	HRH_Eswitch	HM261192	HP077192	
			C	HRH_1U_ATT	HRH_E1U_ATT	HM275192	HP091192	
			C	HRH_1L_ATT	HRH_E1L_ATT	HM276192	HP092192	
			C	HRH_2U_ATT	HRH_E2U_ATT	HM277192	HP093192	
			C	HRH_2L_ATT	HRH_E2L_ATT	HM278192	HP094192	
			C	HRH_3U_ATT	HRH_E3U_ATT	HM279192	HP095192	
			C	HRH_3L_ATT	HRH_E3L_ATT	HM280192	HP096192	
			C	HRH_4U_ATT	HRH_E4U_ATT	HM281192	HP097192	
			C	HRH_4L_ATT	HRH_E4L_ATT	HM282192	HP098192	
			C	HRH_Up_OL1_M	HRH_EUp_OL1_M	HM262192	HP079192	
			C	HRH_Up_OL1_A	HRH_EUp_OL1_A	HM263192	HP078192	
			C	HRH_Up_OL2_M	HRH_EUp_OL2_M	HM264192	HP081192	
			C	HRH_Up_OL2_A	HRH_EUp_OL2_A	HM265192	HP080192	
			C	HRH_Up_OL3_M	HRH_EUp_OL3_M	HM266192	HP083192	
			C	HRH_Up_OL3_A	HRH_EUp_OL3_A	HM267192	HP082192	
			C	HRH_Up_OL4_M	HRH_EUp_OL4_M	HM268192	HP085192	
			C	HRH_Up_OL4_A	HRH_EUp_OL4_A	HM269192	HP084192	
			C	HRH_Down_OL5_M	HRH_EDown_OL5_M	HM270192	HP087192	
			C	HRH_Down_OL5_A	HRH_EDown_OL5_A	HM271192	HP086192	
			C	HRH_Down_OL6_M	HRH_EDown_OL6_M	HM272192	HP089192	
			C	HRH_Down_OL6_A	HRH_EDown_OL6_A	HM273192	HP088192	
			C	HRH_Down_OL7_M	HRH_EDown_OL7_M	HM274192	HP090192	
			C	HRH_switch	HRH_Switch_S	HM006192	HP077192	
			C	HRH_1U_ATT	HRH_1U_ATT	HM015192	HP091192	
			C	HRH_1L_ATT	HRH_1L_ATT	HM016192	HP092192	
			C	HRH_2U_ATT	HRH_2U_ATT	HM017192	HP093192	
			C	HRH_2L_ATT	HRH_2L_ATT	HM018192	HP094192	
			C	HRH_3U_ATT	HRH_3U_ATT	HM020192	HP095192	
			C	HRH_3L_ATT	HRH_3L_ATT	HM021192	HP096192	
			C	HRH_4U_ATT	HRH_4U_ATT	HM022192	HP097192	
			C	HRH_4L_ATT	HRH_4L_ATT	HM023192	HP098192	
			C	HRH_Up_OL1_M	HRH_Up_OL1_M	HM026192	HP079192	
			C	HRH_Up_OL1_A	HRH_Up_OL1_A	HM025192	HP078192	
			C	HRH_Up_OL2_M	HRH_Up_OL2_M	HM030192	HP081192	
			C	HRH_Up_OL2_A	HRH_Up_OL2_A	HM029192	HP080192	
			C	HRH_Up_OL3_M	HRH_Up_OL3_M	HM034192	HP083192	

id	cvs_mnem	type	inter	cpc_name_mnem	pcf_name_mnem	parnam	val	tol
			C	HRH_Up_OL3_A	HRH_Up_OL3_A	HM033192	HP082192	
			C	HRH_Up_OL4_M	HRH_Up_OL4_M	HM038192	HP085192	
			C	HRH_Up_OL4_A	HRH_Up_OL4_A	HM037192	HP084192	
			C	HRH_Down_OL5_M	HRH_Down_OL5_M	HM042192	HP087192	
			C	HRH_Down_OL5_A	HRH_Down_OL5_A	HM041192	HP086192	
			C	HRH_Down_OL6_M	HRH_Down_OL6_M	HM046192	HP089192	
			C	HRH_Down_OL6_A	HRH_Down_OL6_A	HM045192	HP088192	
			C	HRH_Down_OL7_M	HRH_LO7_F	HM048192	HP090192	
0118	Config_HRS_H_blocks	C						
			C	HRH_Block_1	HRH_EBlock_1	HM283192	HP099192	
			C	HRH_Block_2	HRH_EBlock_2	HM284192	HP100192	
			C	HRH_Block_3	HRH_EBlock_3	HM285192	HP101192	
			C	HRH_Block_4	HRH_EBlock_4	HM286192	HP102192	
			C	HRH_Block_5	HRH_EBlock_5	HM287192	HP103192	
			C	HRH_Block_6	HRH_EBlock_6	HM288192	HP104192	
			C	HRH_Block_7	HRH_EBlock_7	HM289192	HP105192	
			C	HRH_Block_8	HRH_EBlock_8	HM290192	HP106192	
0119	Config_HRS_V_att_lo	C						
			C	HRV_switch	HRV_Eswitch	HM291192	HP107192	
			C	HRV_1U_ATT	HRV_E1U_ATT	HM305192	HP121192	
			C	HRV_1L_ATT	HRV_E1L_ATT	HM306192	HP122192	
			C	HRV_2U_ATT	HRV_E2U_ATT	HM307192	HP123192	
			C	HRV_2L_ATT	HRV_E2L_ATT	HM308192	HP124192	
			C	HRV_3U_ATT	HRV_E3U_ATT	HM309192	HP125192	
			C	HRV_3L_ATT	HRV_E3L_ATT	HM310192	HP126192	
			C	HRV_4U_ATT	HRV_E4U_ATT	HM311192	HP127192	
			C	HRV_4L_ATT	HRV_E4L_ATT	HM312192	HP128192	
			C	HRV_Up_OL1_M	HRV_EUp_OL1_M	HM292192	HP109192	
			C	HRV_Up_OL1_A	HRV_EUp_OL1_A	HM293192	HP108192	
			C	HRV_Up_OL2_M	HRV_EUp_OL2_M	HM294192	HP111192	
			C	HRV_Up_OL2_A	HRV_EUp_OL2_A	HM295192	HP110192	
			C	HRV_Up_OL3_M	HRV_EUp_OL3_M	HM296192	HP113192	
			C	HRV_Up_OL3_A	HRV_EUp_OL3_A	HM297192	HP112192	
			C	HRV_Up_OL4_M	HRV_EUp_OL4_M	HM298192	HP115192	
			C	HRV_Up_OL4_A	HRV_EUp_OL4_A	HM299192	HP114192	
			C	HRV_Down_OL5_M	HRV_EDown_OL5_M	HM300192	HP117192	
			C	HRV_Down_OL5_A	HRV_EDown_OL5_A	HM301192	HP116192	
			C	HRV_Down_OL6_M	HRV_EDown_OL6_M	HM302192	HP119192	
			C	HRV_Down_OL6_A	HRV_EDown_OL6_A	HM303192	HP118192	
			C	HRV_Down_OL7_M	HRV_EDown_OL7_M	HM304192	HP120192	
			C	HRV_switch	HRV_Switch_S	HM135192	HP107192	
			C	HRV_1U_ATT	HRV_1U_ATT	HM144192	HP121192	
			C	HRV_1L_ATT	HRV_1L_ATT	HM145192	HP122192	
			C	HRV_2U_ATT	HRV_2U_ATT	HM146192	HP123192	
			C	HRV_2L_ATT	HRV_2L_ATT	HM147192	HP124192	
			C	HRV_3U_ATT	HRV_3U_ATT	HM149192	HP125192	

id	cvs_mnem	type	inter	cpc_name_mnem	pcf_name_mnem	parnam	val	tol
			C	HRV_3L_ATT	HRV_3L_ATT	HM150192	HP126192	
			C	HRV_4U_ATT	HRV_4U_ATT	HM151192	HP127192	
			C	HRV_4L_ATT	HRV_4L_ATT	HM152192	HP128192	
			C	HRV_Up_OL1_M	HRV_Up_OL1_M	HM155192	HP109192	
			C	HRV_Up_OL1_A	HRV_Up_OL1_A	HM154192	HP108192	
			C	HRV_Up_OL2_M	HRV_Up_OL2_M	HM159192	HP111192	
			C	HRV_Up_OL2_A	HRV_Up_OL2_A	HM158192	HP110192	
			C	HRV_Up_OL3_M	HRV_Up_OL3_M	HM163192	HP113192	
			C	HRV_Up_OL3_A	HRV_Up_OL3_A	HM162192	HP112192	
			C	HRV_Up_OL4_M	HRV_Up_OL4_M	HM167192	HP115192	
			C	HRV_Up_OL4_A	HRV_Up_OL4_A	HM166192	HP114192	
			C	HRV_Down_OL5_M	HRV_Down_OL5_M	HM171192	HP117192	
			C	HRV_Down_OL5_A	HRV_Down_OL5_A	HM170192	HP116192	
			C	HRV_Down_OL6_M	HRV_Down_OL6_M	HM175192	HP119192	
			C	HRV_Down_OL6_A	HRV_Down_OL6_A	HM174192	HP118192	
			C	HRV_Down_OL7_M	HRV_LO7_F	HM177192	HP120192	
0120	Config_HRS_V_blocks	C						
			C	HRV_Block_1	HRV_EBlock_1	HM313192	HP129192	
			C	HRV_Block_2	HRV_EBlock_2	HM314192	HP130192	
			C	HRV_Block_3	HRV_EBlock_3	HM315192	HP131192	
			C	HRV_Block_4	HRV_EBlock_4	HM316192	HP132192	
			C	HRV_Block_5	HRV_EBlock_5	HM317192	HP133192	
			C	HRV_Block_6	HRV_EBlock_6	HM318192	HP134192	
			C	HRV_Block_7	HRV_EBlock_7	HM319192	HP135192	
			C	HRV_Block_8	HRV_EBlock_8	HM320192	HP136192	
0121	FCU_parameter_scan	C						
			C	HIF_Nvoltage	HIF_Nvoltage	HM268191	HP066197	
			C	HIF_Nmagnet	HIF_Nmagnet	HM269191	HP067197	
			C	HIF_step_time	HIF_step_time	HM270191	HP068197	
			C	HIF_ch1_mxbias0_V	HIF_ch1_mx0_V	HM271191	HP069191	
			C	HIF_cv1_mxbias0_V	HIF_cv1_mx0_V	HM272191	HP070197	
			C	HIF_mxbias_step_V	HIF_mx_step_V	HM273191	HP071197	
			C	HIF_ch1_mx_mg0_C	HIF_ch1_mxmg0_C	HM274191	HP072197	
			C	HIF_cv1_mx_mg0_C	HIF_cv1_mxmg0_C	HM275191	HP073197	
			C	HIF_mx_mg_step_C	HIF_mxmg_step_C	HM276191	HP074197	
0122	Config_WBS_H	C						
			C	HWH_LASER1_S	HWH_ELASER1_S	HM067193	HP142193	
			C	HWH_LASER2_S	HWH_ELASER2_S	HM068193	HP143193	
			C	HWH_Heater	HWH_EHeater	HM069193	HP144193	
			C	HWH_Latchup_S	HWH_ELatchup_S	HM070193	HP145193	
			C	HWH_ATT_Band_4	HWH_EATT_Band_4	HM066193	HP141193	
			C	HWH_ATT_Band_3	HWH_EATT_Band_3	HM065193	HP140193	
			C	HWH_ATT_Band_2	HWH_EATT_Band_2	HM064193	HP139193	
			C	HWH_ATT_Band_1	HWH_EATT_Band_1	HM063193	HP138193	
			C	HWH_ATT_IN	HWH_EATT_IN	HM062193	HP137193	
0123	Config_WBS_V	C						

id	cvs_mnem	type	inter	cpc_name_mnem	pcf_name_mnem	parnam	val	tol
			C	HWV_LASER1_S	HWV_ELASER1_S	HM076193	HP151193	
			C	HWV_LASER2_S	HWV_ELASER2_S	HM077193	HP152193	
			C	HWV_Heater	HWV_EHeater	HM078193	HP153193	
			C	HWV_Latchup_S	HWV_ELatchup_S	HM260192	HP154193	
			C	HWV_ATT_Band_4	HWV_EATT_Band_4	HM075193	HP150193	
			C	HWV_ATT_Band_3	HWV_EATT_Band_3	HM074193	HP149193	
			C	HWV_ATT_Band_2	HWV_EATT_Band_2	HM073193	HP148193	
			C	HWV_ATT_Band_1	HWV_EATT_Band_1	HM072193	HP147193	
			C	HWV_ATT_IN	HWV_EATT_IN	HM071193	HP146193	

Table 11.2-1 Command parameter reflection

Apart from the one-to-one reflection of command parameters the commands have influence on more monitor parameters. Whether the affect is correct can be monitored by a corresponding synthetic parameter. In general the phylosophy is as follows. The command parameter is reflected directly and converted to the commanded engineering value. This engineering value is the expected value of the corresponding analog monitor parameter, and therefore, the difference between the two (the engineering value of the reflected command parameter and the engineering value of the analog monitor parameter must be within a small range.

Table 11.2-2 Analog FCU-monitor parameters affected by commands.

Telecommand	Command parameter	Reflected parameter	Analog Monitor	Error
Configure_FCU				
	HF_CH1_DHTR_C	HF_EH1_DHTR_C	HF_AH1_DHTR_C	HF_DFH1_DHTR_C
	HF_CH2_FIF1_Drain_V	HF_EH2_FIF1_Drain_V	HF_AH2_FIF1_Drain_V	HF_DFH2_FIF1_Drain_V
	HF_CH2_FIF1_Drain_C	HF_EH2_FIF1_Drain_C	HF_AH2_FIF1_Drain_C	HF_DFH2_FIF1_Drain_C
	HF_CH2_FIF2_Drain_V	HF_EH2_FIF2_Drain_V	HF_AH2_FIF2_Drain_V	HF_DFH2_FIF2_Drain_V
	HF_CH2_FIF2_Drain_C	HF_EH2_FIF2_Drain_C	HF_AH2_FIF2_Drain_C	HF_DFH2_FIF2_Drain_C
	HF_CH2_SIF1_Drain_V	HF_EH2_SIF1_Drain_V	HF_AH2_SIF1_Drain_V	HF_DFH2_SIF1_Drain_V
	HF_CH2_SIF1_Drain_C	HF_EH2_SIF1_Drain_C	HF_AH2_SIF1_Drain_C	HF_DFH2_SIF1_Drain_C
	HF_CH2_SIF2_Drain_V	HF_EH2_SIF2_Drain_V	HF_AH2_SIF2_Drain_V	HF_DFH2_SIF2_Drain_V
	HF_CH2_SIF2_Drain_C	HF_EH2_SIF2_Drain_C	HF_AH2_SIF2_Drain_C	HF_DFH2_SIF2_Drain_C
	HF_CH2_SIF3_Drain_V	HF_EH2_SIF3_Drain_V	HF_AH2_SIF3_Drain_V	HF_DFH2_SIF3_Drain_V
	HF_CH2_SIF3_Drain_C	HF_EH2_SIF3_Drain_C	HF_AH2_SIF3_Drain_C	HF_DFH2_SIF3_Drain_C
	HF_CV1_DHTR_C	HF_EV1_DHTR_C	HF_AV1_DHTR_C	HF_DFV1_DHTR_C
	HF_CV2_FIF1_Drain_V	HF_EV2_FIF1_Drain_V	HF_AV2_FIF1_Drain_V	HF_DFV2_FIF1_Drain_V
	HF_CV2_FIF1_Drain_C	HF_EV2_FIF1_Drain_C	HF_AV2_FIF1_Drain_C	HF_DFV2_FIF1_Drain_C
	HF_CV2_FIF2_Drain_V	HF_EV2_FIF2_Drain_V	HF_AV2_FIF2_Drain_V	HF_DFV2_FIF2_Drain_V
	HF_CV2_FIF2_Drain_C	HF_EV2_FIF2_Drain_C	HF_AV2_FIF2_Drain_C	HF_DFV2_FIF2_Drain_C

	HF_CV2_SIF1_Drain_V	HF_EV2_SIF1_Drain_V	HF_AV2_SIF1_Drain_V	HF_DFV2_SIF1_Drain_V
	HF_CV2_SIF1_Drain_C	HF_EV2_SIF1_Drain_C	HF_AV2_SIF1_Drain_C	HF_DFV2_SIF1_Drain_C
	HF_CV2_SIF2_Drain_V	HF_EV2_SIF2_Drain_V	HF_AV2_SIF2_Drain_V	HF_DFV2_SIF2_Drain_V
	HF_CV2_SIF2_Drain_C	HF_EV2_SIF2_Drain_C	HF_AV2_SIF2_Drain_C	HF_DFV2_SIF2_Drain_C
	HF_CV2_SIF3_Drain_V	HF_EV2_SIF3_Drain_V	HF_AV2_SIF3_Drain_V	HF_DFV2_SIF3_Drain_V
	HF_CV2_SIF3_Drain_C	HF_EV2_SIF3_Drain_C	HF_AV2_SIF3_Drain_C	HF_DFV2_SIF3_Drain_C
	HF_CPR_Mixer_H_pwr	HF_EPR_Mixer_H_pwr	HF_APR_Mixer_H_pwr	HF_DFPR_Mixer_H_pwr
	HF_CPR_Mixer_V_pwr	HF_EPR_Mixer_V_pwr	HF_APR_Mixer_V_pwr	HF_DFPR_Mixer_V_pwr
	HF_CPR_Chopper_pwr	HF_EPR_Chopper_pwr	HF_APR_Chopper_pwr	HF_DFPR_Chopper_pwr
	HF_CPR_Cal_Source_C	HF_EPR_Cal_Source_C	HF_APR_Cal_Source_C	HF_DFPR_Cal_Source_C
	HF_CH1_MXBIAS_V	HF_EH1_MXBIAS_V	HF_AH1_MXBIAS_V	HF_DFH1_MXBIAS_V
	HF_CH1_MX_MG_C	HF_EH1_MX_MG_C	HF_AH1_MX_MG_C	HF_DFH1_MX_MG_C
	HF_CH2_DPACT_C	HF_EH2_DPACT_C	HF_AH2_DPACT_C	HF_DFH2_DPACT_C
	HF_CV1_MXBIAS_V	HF_EV1_MXBIAS_V	HF_AV1_MXBIAS_V	HF_DFV1_MXBIAS_V
	HF_CV1_MX_MG_C	HF_EV1_MX_MG_C	HF_AV1_MX_MG_C	HF_DFV1_MX_MG_C
	HF_CV2_DPACT_C	HF_EV2_DPACT_C	HF_AV2_DPACT_C	HF_DFV2_DPACT_C
	HF_CPR_Chopper_Rot	HF_EPR_Chopper_Rot		

11.3 Telecommand sequences

HIFI does not make use of the SCOS-2000 telecommand sequences

12 INSTRUMENT OPERATIONS PROCEDURES

12.1 Operational Constraints

- In order to properly discharge the FPGAs, a waiting period of minimal 10 minutes shall be observed between any power down and subsequent power up.

- Thermal constraints are given in section 7.2
  For the proper performance of the instrument the temperatures as listed in table 7.2-3 shall be observed. These temperatures are based on the actual qualification and acceptance temperatures for the units.

- The 1st LO's of the HRS can potentially generate weak spurs within the Herschel TC receiver EMC notch at one setting, f_{LO} = 14.02 GHz. HIFI can operate without sgnificant loss of functionality without using this setting
  The HRS LO setting of 14.02 GHz shall be avoided.

12.2 Commissioning operations procedures for ground testing

This section describes the CUS scripts used in the framework of the HIFI FM test campaign. Its content is directed to the user of such scripts, such as test engineers and/or test operators. It thus complements the information contained in the "Detailed test plan of HIFI Instrument Tests" from a practical point of view, but by no means substitutes it.

The following sections will provide the following information:

- a reminder of the CUS purpose
- a table gathering all information about the CUS files involved and the associated parameter inputs for the test
- a description of the test setup used
- a description of the CUS test sequence
- a description of the associated QLA applications
- a list of expected data-frames with associated BBID

12.2.1 Power switch on/off

12.2.1.1 Introduction

HIFI needs different power-up procedures, for 6 different instrument configurations:

- warm, with FPU and LOU dummies, both prime and redundant,
- warm LOU (IST tests) both prime and redundant,
- cold LOU (TV tests), both prime and redundant

These tests are needed in the test sequence defined by Astrium (AD1). In general a Power-up procedure must precede a Short Performance Test (SFT).

The six power-up procedures are almost identical. The dummy power-ons differ in that they do not require an FPU chopper integrity check but they do require the presence of a HIFI expert to handle the LOU dummy.

The TCL command files are the same for all configurations, the differences between configurations are handled through different CUS versions. It means that the operator has to use a different BUSLIST on the CDMS and the HIFI IEGSE has to point to a different instrument configuration. For each CUS release, there will be two instrument configurations prepared: nominal and redundant.

The differences between dummy, IST and TV configuration may require a change of MIB and requires the use of diffent CUS.

12.2.1.2 HIFI POWER_ON, PRIME and redundant MODE, with warm dummies for fpu and LOU

12.2.1.2.1 Purpose

- To switch on HIFI in its prime mode in the Herschel IST environment, with warm dummies for the FPU and for the LOU, together with the HIFI I_EGSE
- To verify that the ICU is functioning,
- To load and verify the safety tables and software patches in the LCU.

Commands and telemetry are collected in the HIFI data base via the HIFI-IEGSE. Command parameters are substituted by the I_EGSE.

12.2.1.2.2 Instrument configuration

The procedure assumes that the complete HIFI instrument is integrated in the Herschel payload module, except for the FPU and the LOU, which are replaced by warm dummies.
Differences between prime and redundant configuration and differences with the normal configuration (cold FPU and the actual warm or cold LOU) are handled through the CUS and the MIB.

12.2.1.2.3 Software configuration

MIB version:
CUS version:
OBS version:

12.2.1.2.4 EGSE

The procedure needs the HIFI I-EGSE, to fill in command parameters and to record the instrument data in the HCSS data base.
The I-EGSE can be started up by the Astrium personnel (RD 1).

12.2.1.2.5 Personnel

Operations with the LOU dummy require the presence of HIFI personnel, i.c. an LOU expert.

12.2.1.2.6 Pre-conditions

- HIFI switched off
- I_EGSE shut down

12.2.1.2.7 Post-conditions

- I-EGSE started up,
- HIFI powered up,
- OBS loaded and booted,
- LCU safety tables loaded and verified,
- HK started,
- HIFI ready for the SFT

12.2.1.2.8 Go / nogo

In case of non-conformances HIFI personnel must be consulted before continuing.

.

12.2.1.2.9 Procedure

Power on with Dummy FPU and LOU, prime/redundant mode							
#	Duration (min)	Actor	Activity	Tcl Script	CUS mode and parameters	Result	Signoff
Preparation							
1	5	-	Start HIFI I-EGSE according to procedure RD1 Requires to specify instrument configuration and prime/redundant mode				
Power on ICU							
2	3	css	Switch on PDU for HIFI subsystem ICU, prime/redundant as applicable				
3	2	css	Verify PDU current for ICU to be 1.0 A p/m 10%				
4	2	css	Verify arrival on (5,1) telemetry packets from HIFI				

Power on with Dummy FPU and LOU, prime/redundant mode							
#	Duration (min)	Actor	Activity	Tcl Script	CUS mode and parameters	Result	Signoff
5	-0.02	css	run tcl script	HIFIST_Startup_force_boot	Testmode_force_boot partition_ID 0		
6	2	css	Verify HIFI HK telemetry updating every 3 seconds				
7	2	css	Note value of HI_SW_Revision				
8	-0.02	css	run tcl script	HIFIST_Startup_OBS_SFT	Testmode_OBS_SFT		
9	5	css	Verify arrival of memory check report Verify HK rate change to 1 per second Verify arrival of time verification report				
Switch on and verify Focal plane subsystem							
10	-0.02	css	run tcl script	HIFIST_Startup_FCU_on	Testmode_notify_PDU_status_on status_FCU ON status_LCU OFF status_WBSV OFF status_WBSH OFF status_HRSV OFF status_HRSH OFF		
11 - 17			not applicable for dummy FPU and LOU				
Power on backends							

Power on with Dummy FPU and LOU, prime/redundant mode							
#	Duration (min)	Actor	Activity	Tcl Script	CUS mode and parameters	Result	Signoff
18	3	css	Switch on PDU for HIFI subsystem WBSH				
19	2	css	Verify PDU current for WBSH to be 0.92 A p/m 10%				
20	-0.02	css	run tcl script	HIFIST_Startup_WBSH_on	Testmode_notify_PDU_status_on status_FCU ON status_LCU OFF status_WBSV OFF status_WBSH ON status_HRSV OFF status_HRSH OFF		
21	3	css	Switch on PDU for HIFI subsystem WBSV				
22	2	css	Verify PDU current for WBSV to be 0.92 A p/m 10%				
23	-0.02	css	run tcl script	HIFIST_Startup_WBSV_on	Testmode_notify_PDU_status_on status_FCU ON status_LCU OFF status_WBSV ON status_WBSH ON status_HRSV OFF status_HRSH OFF		
24	3	css	Switch on PDU for HIFI subsystem HRSH				
25	2	css	Verify PDU current for HRSH to be 2.32 A p/m 10%				
26	3	css	Switch on PDU for HIFI subsystem HRSV				

Power on with Dummy FPU and LOU, prime/redundant mode							
#	Duration (min)	Actor	Activity	Tcl Script	CUS mode and parameters	Result	Signoff
27	2	css	Verify PDU current for HRSV to be 2.32 A p/m 10%				
28	-0.02	css	run tcl script	HIFIST_Startup_HRS_FT0	Testmode_HRS_functional_test_No_0		
29	-0.02	css	run tcl script	HIFIST_Startup_HRS_on	Testmode_notify_PDU_status_on status_FCU ON status_LCU OFF status_WBSV ON status_WBSH ON status_HRSV ON status_HRSH ON		
LO switchon and safety tables							
30	3	css	Switch on PDU for HIFI subsystem LCU, prime/redundant as applicable				
31	2	css	Verify PDU current for LCU to be 1.10 A p/m 10%				
32	-0.02	css	run tcl script	HIFIST_Startup_LCU_on	Testmode_notify_PDU_status_on status_FCU ON status_LCU ON status_WBSV ON status_WBSH ON status_HRSV ON status_HRSH ON		
33	-0.02	css	run tcl script	HIFIST_Startup_LCU_table_load	Testmode_upload_LCU_table_AIV		
34	-0.02	css	run tcl script	HIFIST_Startup_LCU_table_read	Testmode_readback_LCU_table_AIV		

Power on with Dummy FPU and LOU, prime/redundant mode							
#	Duration (min)	Actor	Activity	Tcl Script	CUS mode and parameters	Result	Signoff
35	5	-	On the I_EGSE run the command 'LCUtable/verifyreadback'. If the word PASS does not appear on the screen at the end, this is a nogo on this test procedure.				

Power on with Dummy FPU and LOU, prime/redundant mode							
#	Duration (min)	Actor	Activity	Tcl Script	CUS mode and parameters	Result	Signoff
36	5	css	In the CCS system, edit the OL calculation of synthetic parameter HD247194 (HL_ptv_checksum) to use the value for VAR_corr provided by HIFI, where indicated in the existing OL code. Verify that the value of parameter HD249194 (HL_commandable) has changed to 'OK' as a result.				
37	-0.02	css	run tcl script	HIFIST_Startup_LO_Nominal	Testmode_Set_LO_Nominal		
End of Procedure							

12.2.1.3 HIFI POWER_ON, PRIME and redundant MODE, WITH warm LO AND WARM FPU (IST configuration)

12.2.1.3.1 Purpose

- To switch on HIFI in its prime mode in the Herschel IST environment, together with the HIFI I_EGSE
- To verify that the ICU is functioning,
- To load and verify the safety tables and software patches in the LCU.

Commands and telemetry are collected in the HIFI data base via the HIFI-IEGSE. Command parameters are substituted by the I_EGSE.

12.2.1.3.2 Instrument configuration

The procedure assumes that the complete HIFI instrument is integrated in the Herschel payload module: ICU, FP subsystem, LO subsystem, WBS and HRS spectrometers, outside the thermal-vacuum tank.
The FPU is expected to be at room temperature in air.
The LOU is at ambient temperature and misaligned with respect to the FPU.
Differences between prime and redundant configuration and between warm and cold LOU are handled through the CUS and the MIB.

12.2.1.3.3 Software configuration

MIB version:
CUS version:
OBS version:

12.2.1.3.4 EGSE

The procedure needs the HIFI I-EGSE, to fill in command parameters and to record the instrument data in the HCSS data base.
The I-EGSE can be started up by the Astrium personnel (RD 1).

12.2.1.3.5 Personnel

HIFI personnel is not required.

12.2.1.3.6 Pre-conditions

- HIFI switched off
- I_EGSE shut down

12.2.1.3.7 Post-conditions

- I-EGSE started up,
- HIFI powered up,
- OBS loaded and booted,
- LCU safety tables loaded and verified,
- HK started,
- HIFI ready for the SFT

12.2.1.3.8 Go / nogo

In case of non-conformances HIFI personnel must be consulted before continuing.

12.2.1.3.9 Procedure

Power on with warm FPU and warm LOU, prime/redundant mode							
#	Duration (min)	Actor	Activity	Tcl Script	CUS mode and parameters	Result	Signoff
Preparation							
1	5	-	Start HIFI I-EGSE according to procedure RD1 Requires to specify instrument configuration and prime/redundant mode				
Power on ICU							
2	3	css	Switch on PDU for HIFI subsystem ICU, prime/redundant as applicable				
3	2	css	Verify PDU current for ICU to be 1.0 A p/m 10%				
4	2	css	Verify arrival on (5,1) telemetry packets from HIFI				

Power on with warm FPU and warm LOU, prime/redundant mode							
#	Duration (min)	Actor	Activity	Tcl Script	CUS mode and parameters	Result	Signoff
5	-0.02	css	run tcl script	HIFIST_Startup_force_boot	Testmode_force_boot partition_ID 0		
6	2	css	Verify HIFI HK telemetry updating every 3 seconds				
7	2	css	Note value of HI_SW_Revision				
8	-0.02	css	run tcl script	HIFIST_Startup_OBS_SFT	Testmode_OBS_SFT		
9	5	css	Verify arrival of memory check report Verify HK rate change to 1 per second Verify arrival of time verification report				
Switch on and verify Focal plane subsystem							
10	-0.02	css	run tcl script	HIFIST_Startup_FCU_on	Testmode_notify_PDU_status_on status_FCU ON status_LCU OFF status_WBSV OFF status_WBSH OFF status_HRSV OFF status_HRSH OFF		
11							
12							
13							
14							

Power on with warm FPU and warm LOU, prime/redundant mode							
#	Duration (min)	Actor	Activity	Tcl Script	CUS mode and parameters	Result	Signoff
15							
16							
17							
Power on backends							
18	3	css	Switch on PDU for HIFI subsystem WBSH				
19	2	css	Verify PDU current for WBSH to be 0.92 A p/m 10%				
20	-0.02	css	run tcl script	HIFIST_Startup_WBSH_on	Testmode_notify_PDU_status_on status_FCU ON status_LCU OFF status_WBSV OFF status_WBSH ON status_HRSV OFF status_HRSH OFF		
21	3	css	Switch on PDU for HIFI subsystem WBSV				
22	2	css	Verify PDU current for WBSV to be 0.92 A p/m 10%				
23	-0.02	css	run tcl script	HIFIST_Startup_WBSV_on	Testmode_notify_PDU_status_on status_FCU ON status_LCU OFF status_WBSV ON status_WBSH ON status_HRSV OFF status_HRSH OFF		
24	3	css	Switch on PDU for HIFI subsystem HRSH				

Power on with warm FPU and warm LOU, prime/redundant mode							
#	Duration (min)	Actor	Activity	Tcl Script	CUS mode and parameters	Result	Signoff
25	2	css	Verify PDU current for HRSH to be 2.32 A p/m 10%				
26	3	css	Switch on PDU for HIFI subsystem HRSV				
27	2	css	Verify PDU current for HRSV to be 2.32 A p/m 10%				
28	-0.02	css	run tcl script	HIFIST_Startup_HRS_FT0	Testmode_HRS_functional_test_No_0		
29	-0.02	css	run tcl script	HIFIST_Startup_HRS_on	Testmode_notify_PDU_status_on status_FCU ON status_LCU OFF status_WBSV ON status_WBSH ON status_HRSV ON status_HRSH ON		
LO switchon and safety tables							
30	3	css	Switch on PDU for HIFI subsystem LCU, prime/redundant as applicable				
31	2	css	Verify PDU current for LCU to be 1.10 A p/m 10%				
32	-0.02	css	run tcl script	HIFIST_Startup_LCU_on	Testmode_notify_PDU_status_on status_FCU ON status_LCU ON status_WBSV ON status_WBSH ON status_HRSV ON status_HRSH ON		
33	-0.02	css	run tcl script	HIFIST_Startup_LCU_table_load	Testmode_upload_LCU_table_AIV		
34	-0.02	css	run tcl script	HIFIST_Startup_LCU_table_read	Testmode_readback_LCU_table_AIV		

Power on with warm FPU and warm LOU, prime/redundant mode							
#	Duration (min)	Actor	Activity	Tcl Script	CUS mode and parameters	Result	Signoff
35	5	-	On the I_EGSE run the command 'LCUtable/verifyreadback'. If the word PASS does not appear on the screen at the end, this is a nogo on this test procedure.				

Power on with warm FPU and warm LOU, prime/redundant mode							
#	Duration (min)	Actor	Activity	Tcl Script	CUS mode and parameters	Result	Signoff
36	5	css	In the CCS system, edit the OL calculation of synthetic parameter HD247194 (HL_ptv_checksum) to use the value for VAR_corr provided by HIFI, where indicated in the existing OL code. Verify that the value of parameter HD249194 (HL_commandable) has changed to 'OK' as a result.				
37	-0.02	css	run tcl script	HIFIST_Startup_LO_Nominal	Testmode_Set_LO_Nominal		
End of Procedure							

12.2.1.4 HIFI POWER_ON, PRIME and redundant MODE, WITH warm LO AND COLD FPU (IST configuration)

12.2.1.4.1 Purpose

- To switch on HIFI in its prime mode in the Herschel IST environment, together with the HIFI I_EGSE
- To verify that the ICU is functioning,
- To load and verify the safety tables and software patches in the LCU.

Commands and telemetry are collected in the HIFI data base via the HIFI-IEGSE. Command parameters are substituted by the I_EGSE.

12.2.1.4.2 Instrument configuration

The procedure assumes that the complete HIFI instrument is integrated in the Herschel payload module: ICU, FP subsystem, LO subsystem, WBS and HRS spectrometers, outside the thermal-vacuum tank.
The FPU is expected to be close to its operational temperatures, but the 2K level is not required.
The LOU is at ambient temperature and misaligned with respect to the FPU.
Differences between prime and redundant configuration and between warm and cold LOU are handled through the CUS and the MIB.

12.2.1.4.3 Software configuration

MIB version:
CUS version:
OBS version:

12.2.1.4.4 EGSE

The procedure needs the HIFI I-EGSE, to fill in command parameters and to record the instrument data in the HCSS data base.
The I-EGSE can be started up by the Astrium personnel (RD 1).

12.2.1.4.5 Personnel

HIFI personnel is not required.

12.2.1.4.6 Pre-conditions

- HIFI switched off
- I_EGSE shut down

12.2.1.4.7 Post-conditions

- I-EGSE started up,
- HIFI powered up,
- OBS loaded and booted,
- LCU safety tables loaded and verified,
- HK started,
- HIFI ready for the SFT

12.2.1.4.8 Go / nogo

In case of non-conformances HIFI personnel must be consulted before continuing.

12.2.1.4.9 Procedure

Power on with Cold FPU and warm LOU, prime/redundant mode							
#	Duration (min)	Actor	Activity	Tcl Script	CUS mode and parameters	Result	Signoff
Preparation							
1	5	-	Start HIFI I-EGSE according to procedure RD1 Requires to specify instrument configuration and prime/redundant mode				
Power on ICU							
2	3	css	Switch on PDU for HIFI subsystem ICU, prime/redundant as applicable				

Power on with Cold FPU and warm LOU, prime/redundant mode							
#	Duration (min)	Actor	Activity	Tcl Script	CUS mode and parameters	Result	Signoff
3	2	css	Verify PDU current for ICU to be 1.0 A p/m 10%				
4	2	css	Verify arrival on (5,1) telemetry packets from HIFI				
5	-0.02	css	run tcl script	HIFIST_Startup_force_boot	Testmode_force_boot partition_ID 0		
6	2	css	Verify HIFI HK telemetry updating every 3 seconds				
7	2	css	Note value of HI_SW_Revision				
8	-0.02	css	run tcl script	HIFIST_Startup_OBS_SFT	Testmode_OBS_SFT		
9	5	css	Verify arrival of memory check report Verify HK rate change to 1 per second Verify arrival of time verification report				
Switch on and verify Focal plane subsystem							
10	-0.02	css	run tcl script	HIFIST_Startup_FCU_on	Testmode_notify_PDU_status_on status_FCU ON status_LCU OFF status_WBSV OFF status_WBSH OFF status_HRSV OFF status_HRSH OFF		

Power on with Cold FPU and warm LOU, prime/redundant mode							
#	Duration (min)	Actor	Activity	Tcl Script	CUS mode and parameters	Result	Signoff
11							
12							
13							
14							
15							
16							
17							
Power on backends							
18	3	css	Switch on PDU for HIFI subsystem WBSH				
19	2	css	Verify PDU current for WBSH to be 0.92 A p/m 10%				
20	-0.02	css	run tcl script	HIFIST_Startup_WBSH_on	Testmode_notify_PDU_status_on status_FCU ON status_LCU OFF status_WBSV OFF status_WBSH ON status_HRSV OFF status_HRSH OFF		
21	3	css	Switch on PDU for HIFI subsystem WBSV				
22	2	css	Verify PDU current for WBSV to be 0.92 A p/m 10%				

Power on with Cold FPU and warm LOU, prime/redundant mode							
#	Duration (min)	Actor	Activity	Tcl Script	CUS mode and parameters	Result	Signoff
23	-0.02	css	run tcl script	HIFIST_Startup_WBSV_on	Testmode_notify_PDU_status_on status_FCU ON status_LCU OFF status_WBSV ON status_WBSH ON status_HRSV OFF status_HRSH OFF		
24	3	css	Switch on PDU for HIFI subsystem HRSH				
25	2	css	Verify PDU current for HRSH to be 2.32 A p/m 10%				
26	3	css	Switch on PDU for HIFI subsystem HRSV				
27	2	css	Verify PDU current for HRSV to be 2.32 A p/m 10%				
28	-0.02	css	run tcl script	HIFIST_Startup_HRS_FT0	Testmode_HRS_functional_test_No_0		
29	-0.02	css	run tcl script	HIFIST_Startup_HRS_on	Testmode_notify_PDU_status_on status_FCU ON status_LCU OFF status_WBSV ON status_WBSH ON status_HRSV ON status_HRSH ON		
LO switchon and safety tables							
30	3	css	Switch on PDU for HIFI subsystem LCU, prime/redundant as applicable				
31	2	css	Verify PDU current for LCU to be 1.10 A p/m 10%				

Power on with Cold FPU and warm LOU, prime/redundant mode							
#	Duration (min)	Actor	Activity	Tcl Script	CUS mode and parameters	Result	Signoff
32	-0.02	css	run tcl script	HIFIST_Startup_LCU_on	Testmode_notify_PDU_status_on status_FCU ON status_LCU ON status_WBSV ON status_WBSH ON status_HRSV ON status_HRSH ON		
33	-0.02	css	run tcl script	HIFIST_Startup_LCU_table_load	Testmode_upload_LCU_table_AIV		
34	-0.02	css	run tcl script	HIFIST_Startup_LCU_table_read	Testmode_readback_LCU_table_AIV		
35	5	-	On the I_EGSE run the command 'LCUtable/verifyreadback'. If the word PASS does not appear on the screen at the end, this is a nogo on this test procedure.				

Power on with Cold FPU and warm LOU, prime/redundant mode							
#	Duration (min)	Actor	Activity	Tcl Script	CUS mode and parameters	Result	Signoff
36	5	css	In the CCS system, edit the OL calculation of synthetic parameter HD247194 (HL_ptv_checksum) to use the value for VAR_corr provided by HIFI, where indicated in the existing OL code. Verify that the value of parameter HD249194 (HL_commandable) has changed to 'OK' as a result.				
37	-0.02	css	run tcl script	HIFIST_Startup_LO_Nominal	Testmode_Set_LO_Nominal		
End of Procedure							

12.2.1.5 HIFI POWER_ON, PRIME and redundant MODE, WITH COLD LO and COLD FPU (TV test)

12.2.1.5.1 Purpose

- To switch on HIFI in its prime mode in the Herschel TV environment, together with the HIFI I_EGSE
- To verify that the ICU is functioning,
- To load and verify the safety tables and software patches in the LCU.

Commands and telemetry are collected in the HIFI data base via the HIFI-IEGSE. Command parameters are substituted by the I_EGSE.

12.2.1.5.2 Instrument configuration

The procedure assumes that the complete HIFI instrument is integrated in the Herschel satellite: ICU, FP subsystem, LO subsystem, WBS and HRS spectrometers, with Herschel placed in the thermal-vacuum tank.
FPU and LOU are expected to be close to their operational temperatures, but the 2K level is not required.
Differences between prime and redundant configuration and between warm and cold LOU are handled through the CUS and the MIB.

12.2.1.5.3 Software configuration

MIB version:
CUS version:
OBS version:

12.2.1.5.4 EGSE

The procedure needs the HIFI I-EGSE, to fill in command parameters and to record the instrument data in the HCSS data base.
The I-EGSE can be started up by the Astrium personnel (RD 1).

12.2.1.5.5 Personnel

HIFI personnel is not required.

12.2.1.5.6 Pre-conditions

- HIFI switched off
- I_EGSE shut down

12.2.1.5.7 Post-conditions

- I-EGSE started up,
- HIFI powered up,
- OBS lbooted,
- LCU safety tables loaded and verified,
- HK started,
- HIFI ready for the SFT

12.2.1.5.8 Go / nogo

In case of non-conformances HIFI personnel must be consulted before continuing.

12.2.1.5.9 Procedure

Power on with Cold FPU and LOU, prime/redundant mode							
#	Duration (min)	Actor	Activity	Tcl Script	CUS mode and parameters	Result	Signoff
Preparation							
1	5	-	Start HIFI I-EGSE according to procedure RD1 Requires to specify instrument configuration and prime/redundant mode				
Power on ICU							
2	3	css	Switch on PDU for HIFI subsystem ICU, prime/redundant as applicable				
3	2	css	Verify PDU current for ICU to be 1.0 A p/m 10%				

Power on with Cold FPU and LOU, prime/redundant mode							
#	Duration (min)	Actor	Activity	Tcl Script	CUS mode and parameters	Result	Signoff
4	2	css	Verify arrival on (5,1) telemetry packets from HIFI				
5	-0.02	css	run tcl script	HIFIST_Startup_force_boot	Testmode_force_boot partition_ID 0		
6	2	css	Verify HIFI HK telemetry updating every 3 seconds				
7	2	css	Note value of HI_SW_Revision				
8	-0.02	css	run tcl script	HIFIST_Startup_OBS_SFT	Testmode_OBS_SFT		
9	5	css	Verify arrival of memory check report Verify HK rate change to 1 per second Verify arrival of time verification report				
Switch on and verify Focal plane subsystem							
10	-0.02	css	run tcl script	HIFIST_Startup_FCU_on	Testmode_notify_PDU_status_on status_FCU ON status_LCU OFF status_WBSV OFF status_WBSH OFF status_HRSV OFF status_HRSH OFF		
11							
12							

Power on with Cold FPU and LOU, prime/redundant mode							
#	Duration (min)	Actor	Activity	Tcl Script	CUS mode and parameters	Result	Signoff
13							
14							
15							
16							
17							
Power on backends							
18	3	css	Switch on PDU for HIFI subsystem WBSH				
19	2	css	Verify PDU current for WBSH to be 0.92 A p/m 10%				
20	-0.02	css	run tcl script	HIFIST_Startup_WBSH_on	Testmode_notify_PDU_status_on status_FCU ON status_LCU OFF status_WBSV OFF status_WBSH ON status_HRSV OFF status_HRSH OFF		
21	3	css	Switch on PDU for HIFI subsystem WBSV				
22	2	css	Verify PDU current for WBSV to be 0.92 A p/m 10%				
23	-0.02	css	run tcl script	HIFIST_Startup_WBSV_on	Testmode_notify_PDU_status_on status_FCU ON status_LCU OFF status_WBSV ON status_WBSH ON status_HRSV OFF status_HRSH OFF		

Power on with Cold FPU and LOU, prime/redundant mode							
#	Duration (min)	Actor	Activity	Tcl Script	CUS mode and parameters	Result	Signoff
24	3	css	Switch on PDU for HIFI subsystem HRSH				
25	2	css	Verify PDU current for HRSH to be 2.32 A p/m 10%				
26	3	css	Switch on PDU for HIFI subsystem HRSV				
27	2	css	Verify PDU current for HRSV to be 2.32 A p/m 10%				
28	-0.02	css	run tcl script	HIFIST_Startup_HRS_FT0	Testmode_HRS_functional_test_No_0		
29	-0.02	css	run tcl script	HIFIST_Startup_HRS_on	Testmode_notify_PDU_status_on status_FCU ON status_LCU OFF status_WBSV ON status_WBSH ON status_HRSV ON status_HRSH ON		
LO switchon and safety tables							
30	3	css	Switch on PDU for HIFI subsystem LCU, prime/redundant as applicable				
31	2	css	Verify PDU current for LCU to be 1.10 A p/m 10%				
32	-0.02	css	run tcl script	HIFIST_Startup_LCU_on	Testmode_notify_PDU_status_on status_FCU ON status_LCU ON status_WBSV ON status_WBSH ON status_HRSV ON status_HRSH ON		

Power on with Cold FPU and LOU, prime/redundant mode							
#	Duration (min)	Actor	Activity	Tcl Script	CUS mode and parameters	Result	Signoff
33	-0.02	css	run tcl script	HIFIST_Startup_LCU_table_load	Testmode_upload_LCU_table_AIV		
34	-0.02	css	run tcl script	HIFIST_Startup_LCU_table_read	Testmode_readback_LCU_table_AIV		
35	5	-	On the I_EGSE run the command 'LCUtable/verifyreadback'. If the word PASS does not appear on the screen at the end, this is a nogo on this test procedure.				

Power on with Cold FPU and LOU, prime/redundant mode							
#	Duration (min)	Actor	Activity	Tcl Script	CUS mode and parameters	Result	Signoff
36	5	css	In the CCS system, edit the OL calculation of synthetic parameter HD247194 (HL_ptv_checksum) to use the value for VAR_corr provided by HIFI, where indicated in the existing OL code. Verify that the value of parameter HD249194 (HL_commandable) has changed to 'OK' as a result.				
37	-0.02	css	run tcl script	HIFIST_Startup_LO_Nominal	Testmode_Set_LO_Nominal		
End of Procedure							

12.2.1.6 HIFI POWER_OFF

12.2.1.6.1 Purpose

Power-off HIFI in the IMT/IST/TV environment.
Commands and telemetry are collected in the HIFI data base via the HIFI-IEGSE. Command parameters are substituted by the I_EGSE.

12.2.1.6.2 Instrument configuration

The procedure assumes that the complete HIFI instrument is integrated in the Herschel payload module: ICU, FP subsystem, LO subsystem, WBS and HRS spectrometers (with the exception of the warm FPU and LOU dummies in the warm configuration).
Differences between prime and redundant configuration are handled through the CUS and the MIB

12.2.1.6.3 Software configuration

MIB version:
CUS version:
OBS version:

12.2.1.6.4 EGSE

The procedure needs the HIFI I-EGSE, to fill in command parameters and to record the instrument data in the HCSS data base.

12.2.1.6.5 Personnel

HIFI personnel is not involved.

12.2.1.6.6 Pre-conditions

HIFI switched on,
I_EGSE started up

12.2.1.6.7 Post-conditions

CCS OOL and TCH data transferred to HFI team
HIFI powered down,
I_EGSE shut down.

12.2.1.6.8 Go / nogo

In case of non-conformances HIFI personnel must be consulted before continuing.

12.2.1.6.9 Procedure

HIFI Power off							
#	Duration (min)	Actor	Activity	Tcl Script	CUS mode and parameters	Result	Signoff
Configure to safe mode							
1	-0.02	css	run tcl script	HIFIST_Startup_FPU_standby	Testmode_FPU_standby_hbb_off		
2	-0.02	css	run tcl script	HIFIST_Startup_WBS_standby	Testmode_WBS_standby band 0		
3	-0.02	css	run tcl script	HIFIST_Startup_HRS_standby	Testmode_HRS_standby band 0		
4	-0.02	css	run tcl script	HIFIST_Startup_LCU_standby	Testmode_LCU_standby		
power off							
5	-0.02	css	run tcl script	HIFIST_Startup_all_off	Testmode_notify_PDU_status_on status_FCU OFF status_LCU OFF status_WBSV OFF status_WBSH OFF status_HRSV OFF status_HRSH OFF		
6	5	css	switch off power for HIFI subsystem LCU				
7	5	css	switch off power for HIFI subsystem WBH				

HIFI Power off							
#	Duration (min)	Actor	Activity	Tcl Script	CUS mode and parameters	Result	Signoff
8	5	css	switch off power for HIFI subsystem WBH				
9	5	css	switch off power for HIFI subsystem HRH				
10	5	css	switch off power for HIFI subsystem HRV				
11	5	css	switch off power for HIFI subsystem ICU				
End of Procedure							

12.3 Nominal operations procedures

The Flight procedures are contained in Annex 2. They correspond to their status as of the SVT-1 (March 2008). Updates are however expected to these procedures. The following flow diagrams describe the mode transition routes and the associated scripts, for both prime and redundant instruments.

HIFI distinguishes between Open Loop (OL) context, where the internal FPU chopper has to be used in OPEN loop only, and the Closed Loop (CL) context, where the internal FPU chopper has to be used in CLOSED loop only. Transition between OL and CL can only occur once the chopper integrity tests in open loop have been performed. This route is performed in standby I mode.

12.3.1 Switch On Procedures

12.3.1.1 HIFI Switched off to Intermediate, Prime

Purpose: Switch ON ICU and FCU, and boot ICU on the Prime side
MOC procedure: is merged with the “intermediate to Stby I” in **H_COP_HIF_NSON**

Initial state/mode	Switched Off: HIFI Off
Mois Procedure	HIFI_SwitchedOff_to_Intermediate_Prime
Parameters	ObsID
Final State/mode	Intermediate: HIFI Prime ICU powered and booted

12.3.1.2 HIFI Switched off to Intermediate, Redundant

Purpose: Switch ON ICU and FCU, and boot ICU on the Redundant side
MOC procedure: is merged with the “intermediate to Stby I” in **H_COP_HIF_RSON**

Initial state/mode	Switched Off: HIFI Off
Mois Procedure	HIFI_SwitchedOff_to_Intermediate_Redundant
Parameters	ObsID
Final State/mode	Intermediate: HIFI Redundant ICU powered and booted

12.3.1.3 HIFI Global Switch on in OL context, Prime

Purpose: switch ON all S/S but ICU and FCU on the Prime side. ICU needs to be started up first
MOC procedure: **H_COP_HIF_NSON**

Initial state/mode	Intermediate: HIFI Prime ICU powered and booted

Mois Procedure	HIFI_Intermediate_to_StandbyI_OL_Prime
Parameters	ObsID
Final State/mode	HIFI in stand-by I for OL context

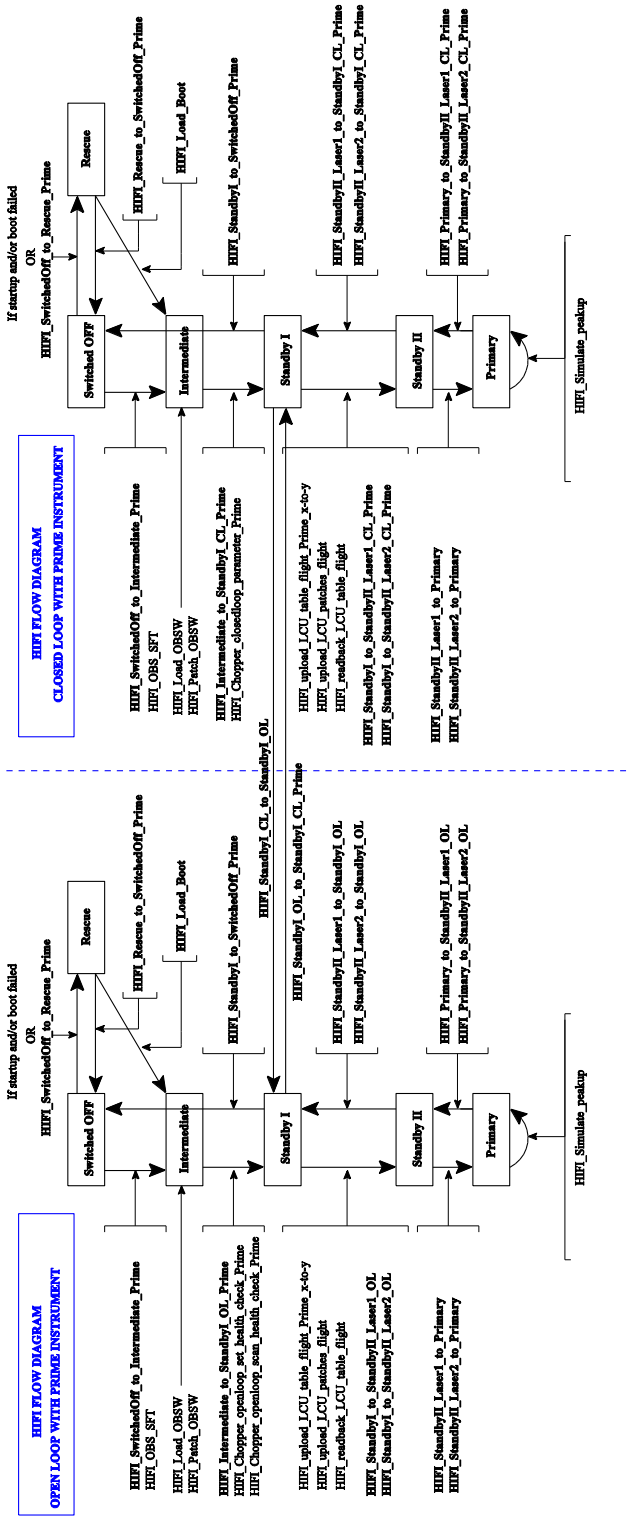

12.3-1, HIFI mode transition flow diagram for Prime instrument

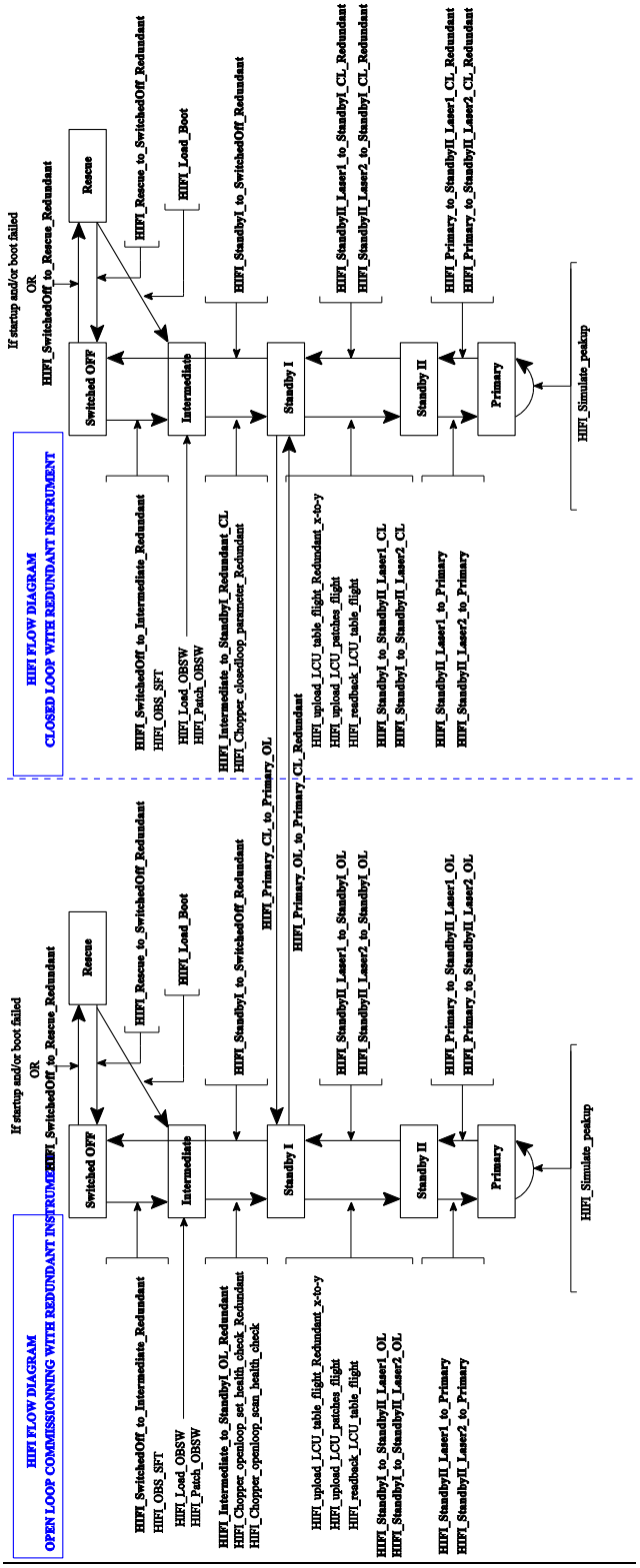

12.3-2, HIFI mode transition flow diagram for Redundant instrument

12.3.1.4 HIFI Global Switch on in OL context, Redundant

Purpose: switch ON all S/S but ICU and FCU on the Redundant side. ICU needs to be started up first
MOC procedure: **H_COP_HIF_RSON**

Initial state/mode	Intermediate: HIFI Redundant ICU powered and booted
Mois Procedure	HIFI_Intermdiate_to_StandbyI_OL_Redundant
Parameters	ObsID
Final State/mode	HIFI in stand-by I for OL context

12.3.1.5 HIFI Global Switch on in CL context, Prime

Purpose: switch ON all S/S but ICU and FCU on the Prime side. ICU needs to be started up first
MOC procedure: **H_FCP_HIF_NSON**

Initial state/mode	Intermediate: HIFI Prime ICU powered and booted
Mois Procedure	HIFI_Intermediate_to_StandbyI_CL_Prime
Parameters	ObsID
Final State/mode	HIFI in stand-by I for CL context

12.3.1.6 HIFI Global Switch on in CL context, Redundant

Purpose: switch ON all S/S but ICU and FCU on the Redundant side. ICU needs to be started up first
MOC procedure: **H_FCP_HIF_RSON**

Initial state/mode	Intermediate: HIFI Redundant ICU powered and booted
Mois Procedure	HIFI_Intermdiate_to_StandbyI_CL_Redundant
Parameters	ObsID
Final State/mode	HIFI in stand-by I for CL context

12.3.1.7 HIFI ICU power up, Prime

Purpose: switch ON only the ICU without booting it to end up in Rescue mode
MOC procedure: **H_FCP_HIF_NION**

Initial state/mode	Switched Off
Mois Procedure	HIFI_SwitchedOff_to_Rescue_Prime
Parameters	none
Final State/mode	Rescue: HIFI ICU switched on with Prime side

12.3.1.8 HIFI ICU power up, Redundant

Purpose: switch ON only the ICU without booting it to end up in Rescue mode
MOC procedure: **H_FCP_HIF_RION**

Initial state/mode	Switched Off
Mois Procedure	HIFI_SwitchedOff_to_Rescue_Redundant
Parameters	none
Final State/mode	Rescue: HIFI ICU switched on with Redundant side

12.3.2 OBSM procedures

12.3.2.1 HIFI load boot in rescue mode, Prime

Purpose: load new OBSW image and boot from BSW
MOC procedure: **H_CRP_HIF_NLBM**

Initial state/mode	HIFI in rescue, prime
Mois Procedure	HIFI_Load_Boot
Parameters	Obsid
Final State/mode	HIFI in intermediate mode, prime

12.3.2.2 HIFI load boot in rescue mode, Redundant

Purpose: load new OBSW image and boot from BSW
MOC procedure: **H_CRP_HIF_RLBM**

Initial state/mode	HIFI in rescue, redundant
Mois Procedure	HIFI_Load_Boot
Parameters	Obsid
Final State/mode	HIFI in intermediate mode, redundant

12.3.2.3 Load full new HIFI OBSW image in intermediate mode

Purpose: load full new OBSW image and boot from OBSW
MOC procedure: **H_FCP_HIF_CLOM**

Initial state/mode	HIFI in intermediate mode, prime or redundant
Mois Procedure	HIFI_Load_OBSW
Parameters	Obsid
Final State/mode	HIFI in intermediate mode, prime or redundant

12.3.2.4 Load HIFI OBSW patch in intermediate mode

Purpose: load OBSW patch and boot from OBSW
MOC procedure: **H_FCP_HIF_CPOM**

Initial state/mode	HIFI in intermediate mode, prime or redundant
Mois Procedure	HIFI_Patch_OBSW
Parameters	Obsid
Final State/mode	HIFI in intermediate mode, prime or redundant

12.3.3 Transition from StandbyI to Standby II procedures

12.3.3.1 HIFI Standby II in OL context with Laser 1 On, Prime

Purpose: Set HIFI into stand-by II mode in OL context, for Prime instrument
MOC procedure: **H_COP_HIF_N121**

Initial state/mode	HIFI in Standby I in OL context
Mois Procedure	HIFI_StandbyI_to_StandbyII_Laser1_OL
Parameters	ObsID
Final State/mode	HIFI in stand-by II with WBS laser1 On

12.3.3.2 HIFI Standby II in OL context with Laser 1 On, Redundant

Purpose: Set HIFI into stand-by II mode in OL context, for Redundant instrument
MOC procedure: **H_COP_HIF_R121**

Initial state/mode	HIFI in Standby I in OL context
Mois Procedure	HIFI_StandbyI_to_StandbyII_Laser1_OL
Parameters	ObsID
Final State/mode	HIFI in stand-by II with WBS laser1 On

12.3.3.3 HIFI Standby II in OL context with Laser 2 On, Prime

Purpose: Set HIFI into stand-by II mode in OL context, for Prime instrument
MOC procedure: **H_COP_HIF_N122**

Initial state/mode	HIFI in Standby I in OL context
Mois Procedure	HIFI_StandbyI_to_StandbyII_Laser2_OL
Parameters	ObsID

Final State/mode	HIFI in stand-by II with WBS laser2 On

12.3.3.4 HIFI Standby II in OL context with Laser 2 On, Redundant

Purpose: Set HIFI into stand-by II mode in OL context, for Redundant instrument
MOC procedure: **H_COP_HIF_R122**

Initial state/mode	HIFI in Standby I in OL context
Mois Procedure	HIFI_StandbyI_to_StandbyII_Laser2_OL
Parameters	ObsID
Final State/mode	HIFI in stand-by II with WBS laser2 On

12.3.3.5 HIFI Standby II in CL context with Laser 1 On, Prime

Purpose: Set HIFI into stand-by II mode in CL context, for Prime instrument
MOC procedure: **H_FCP_HIF_N121**

Initial state/mode	HIFI in Standby I in CL context, prime
Mois Procedure	HIFI_StandbyI_to_StandbyII_Laser1_CL_Prime
Parameters	ObsID
Final State/mode	HIFI in stand-by II with WBS laser1 On

12.3.3.6 HIFI Standby II in CL context with Laser 2 On, Prime

Purpose: Set HIFI into stand-by II mode in CL context, for Prime instrument
MOC procedure: **H_FCP_HIF_N122**

Initial state/mode	HIFI in Standby I in CL context, prime
Mois Procedure	HIFI_StandbyI_to_StandbyII_Laser2_CL_Prime
Parameters	ObsID
Final State/mode	HIFI in stand-by II with WBS laser2 On

12.3.3.7 HIFI Standby II in CL context with Laser 1 On, Redundant

Purpose: Set HIFI into stand-by II mode in CL context, for Redundant instrument
MOC procedure: **H_FCP_HIF_R121**

Initial state/mode	HIFI in Standby I in CL context, redundant
Mois Procedure	HIFI_StandbyI_to_StandbyII_Laser1_CL_Redundant
Parameters	ObsID
Final State/mode	HIFI in stand-by II with WBS laser1 On

12.3.3.8 HIFI Standby II in CL context with Laser 2 On, Redundant

Purpose: Set HIFI into stand-by II mode in CL context, for Redundant instrument
MOC procedure: **H_FCP_HIF_R122**

Initial state/mode	HIFI in Standby I in CL context, redundant
Mois Procedure	HIFI_StandbyI_to_StandbyII_Laser2_CL_Redundant
Parameters	ObsID
Final State/mode	HIFI in stand-by II with WBS laser2 On

12.3.4 Transition from StandbyII to Primary procedures

12.3.4.1 HIFI Primary in OL and CL contexts with Laser 1 On, Prime and Redundant

Purpose: Set HIFI into primary mode in OL and CL contexts, for Prime and Redundant instrument, with laser 1 On
MOC procedure: **H_FCP_HIF_C21P**

Initial state/mode	HIFI in Standby II with WBS laser1 On
Mois Procedure	HIFI_StandbyII_Laser1_to_Primary
Parameters	ObsID
Final State/mode	HIFI Primary with WBS laser1 On

12.3.4.2 HIFI Primary in OL and Primary contexts with Laser 2 On, Prime and Redundant

Purpose: Set HIFI into primary mode in OL and CL contexts, for Prime and Redundant instrument with laser 2 On
MOC procedure: **H_FCP_HIF_C22P**

Initial state/mode	HIFI in Standby II with WBS laser2 On
Mois Procedure	HIFI_StandbyII_Laser2_to_Primary
Parameters	ObsID
Final State/mode	HIFI Primary with WBS laser2 On

12.3.5 Transition from Primary to Standby II procedures

12.3.5.1 HIFI Primary to StandbyII in OL context with Laser 1 On, Prime

Purpose: Set HIFI into stand-by II mode in OL context, for Prime instrument

MOC procedure: **H_COP_HIF_NP21**

Initial state/mode	HIFI Primary with WBS laser1 On
Mois Procedure	HIFI_Primary_to_StandbyII_Laser1_OL
Parameters	ObsID
Final State/mode	HIFI in Standby II with WBS laser1 On in OL context

12.3.5.2 HIFI Primary to StandbyII in OL context with Laser 1 On, Redundant

Purpose: Set HIFI into stand-by II mode in OL context, for Redundant instrument
MOC procedure: **H_COP_HIF_RP21**

Initial state/mode	HIFI Primary with WBS laser1 On
Mois Procedure	HIFI_Primary_to_StandbyII_Laser1_OL
Parameters	ObsID
Final State/mode	HIFI in Standby II with WBS laser1 On in OL context

12.3.5.3 HIFI Primary to StandbyII in OL context with Laser 2 On, Prime

Purpose: Set HIFI into stand-by II mode in OL context, for Prime instrument
MOC procedure: **H_COP_HIF_NP22**

Initial state/mode	HIFI Primary with WBS laser2 On
Mois Procedure	HIFI_Primary_to_StandbyII_Laser2_OL
Parameters	ObsID
Final State/mode	HIFI in Standby II with WBS laser2 On in OL context

12.3.5.4 HIFI Primary to StandbyII in OL context with Laser 2 On, redundant

Purpose: Set HIFI into stand-by II mode in OL context, for redundant instrument
MOC procedure: **H_COP_HIF_RP22**

Initial state/mode	HIFI Primary with WBS laser2 On
Mois Procedure	HIFI_Primary_to_StandbyII_Laser2_OL
Parameters	ObsID
Final State/mode	HIFI in Standby II with WBS laser2 On in OL context

12.3.5.5 HIFI Primary to StandbyII in CL context with Laser 1 On, Prime

Purpose: Set HIFI into stand-by II mode in CL context, for Prime instrument
MOC procedure: **H_FCP_HIF_NP21**

Initial state/mode	HIFI Primary with WBS laser1 On
Mois Procedure	HIFI_Primary_to_StandbyII_Laser1_CL_Prime
Parameters	ObsID
Final State/mode	HIFI in Standby II with WBS laser1 On in CL context, prime

12.3.5.6 HIFI Primary to StandbyII in CL context with Laser 2 On, Prime

Purpose: Set HIFI into stand-by II mode in CL context, for Prime instrument
MOC procedure: **H_FCP_HIF_NP22**

Initial state/mode	HIFI Primary with WBS laser2 On
Mois Procedure	HIFI_Primary_to_StandbyII_Laser2_CL_Prime
Parameters	ObsID
Final State/mode	HIFI in Standby II with WBS laser2 On in CL context, prime

12.3.5.7 HIFI Primary to StandbyII in CL context with Laser 1 On, Redundant

Purpose: Set HIFI into stand-by II mode in CL context, for Redundant instrument
MOC procedure: **H_FCP_HIF_RP21**

Initial state/mode	HIFI Primary with WBS laser1 On
Mois Procedure	HIFI_Primary_to_StandbyII_Laser1_CL_Redundant
Parameters	ObsID
Final State/mode	HIFI in Standby II with WBS laser1 On in CL context, redundant

12.3.5.8 HIFI Primary to StandbyII in CL context with Laser 2 On, Redundant

Purpose: Set HIFI into stand-by II mode in CL context, for Redundant instrument
MOC procedure: **H_FCP_HIF_RP22**

Initial state/mode	HIFI Primary with WBS laser2 On
Mois Procedure	HIFI_Primary_to_StandbyII_Laser2_CL_Redundant
Parameters	ObsID
Final State/mode	HIFI in Standby II with WBS laser2 On in CL context, redundant

12.3.6 Transition from StandbyII to StandbyI procedures

12.3.6.1 HIFI StandbyII with Laser1 on into StandbyI in OL context, Prime

Purpose: Set HIFI from stand-by II into stand-by I mode in OL context, for Prime instrument
MOC procedure: **H_COP_HIF_N211**

Initial state/mode	HIFI in Standby II with WBS laser1 On in OL context
Mois Procedure	HIFI_StandbyII_Laser1_to_StandbyI_OL
Parameters	ObsID
Final State/mode	HIFI StandbyI in OL context

12.3.6.2 HIFI StandbyII with Laser1 on into StandbyI in OL context, Redundant

Purpose: Set HIFI from stand-by II into stand-by I mode in OL context, for Redundant instrument
MOC procedure: **H_COP_HIF_R211**

Initial state/mode	HIFI in Standby II with WBS laser1 On in OL context
Mois Procedure	HIFI_StandbyII_Laser1_to_StandbyI_OL
Parameters	ObsID
Final State/mode	HIFI StandbyI in OL context

12.3.6.3 HIFI StandbyII with Laser2 on into StandbyI in OL context, Prime

Purpose: Set HIFI from stand-by II into stand-by I mode in OL context, for Prime instrument
MOC procedure: **H_COP_HIF_N221**

Initial state/mode	HIFI in Standby II with WBS laser2 On in OL context
Mois Procedure	HIFI_StandbyII_Laser2_to_StandbyI_OL
Parameters	ObsID
Final State/mode	HIFI StandbyI in OL context, prime

12.3.6.4 HIFI StandbyII with Laser2 on into StandbyI in OL context, Redundant

Purpose: Set HIFI from stand-by II into stand-by I mode in OL context, for Redundant instrument
MOC procedure: **H_COP_HIF_R221**

Initial state/mode	HIFI in Standby II with WBS laser2 On in OL context
Mois Procedure	HIFI_StandbyII_Laser2_to_StandbyI_OL
Parameters	ObsID
Final State/mode	HIFI StandbyI in OL context, prime

12.3.6.5 HIFI StandbyII with Laser1 on into StandbyI in CL context, Prime

Purpose: Set HIFI from stand-by II into stand-by I mode in CL context, for Prime instrument
MOC procedure: **H_FCP_HIF_N211**

Initial state/mode	HIFI in Standby II with WBS laser1 On in CL context, prime
Mois Procedure	HIFI_StandbyII_Laser1_to_StandbyI_CL_Prime
Parameters	ObsID
Final State/mode	HIFI StandbyI in CL context, prime

12.3.6.6 HIFI StandbyII with Laser2 on into StandbyI in CL context, Prime

Purpose: Set HIFI from stand-by II into stand-by I mode in CL context, for Prime instrument
MOC procedure: **H_FCP_HIF_N221**

Initial state/mode	HIFI in Standby II with WBS laser2 On in CL context, prime
Mois Procedure	HIFI_StandbyII_Laser2_to_StandbyI_CL_Prime
Parameters	ObsID
Final State/mode	HIFI StandbyI in CL context, prime

12.3.6.7 HIFI StandbyII with Laser1 on into StandbyI in CL context, Redundant

Purpose: Set HIFI from stand-by II into stand-by I mode in CL context, for Redundant instrument
MOC procedure: **H_FCP_HIF_R211**

Initial state/mode	HIFI in Standby II with WBS laser1 On in CL context, redundant
Mois Procedure	HIFI_StandbyII_Laser1_to_StandbyI_CL_Redundant
Parameters	ObsID
Final State/mode	HIFI StandbyI in CL context, redundant

12.3.6.8 HIFI StandbyII with Laser2 on into StandbyI in CL context, Redundant

Purpose: Set HIFI from stand-by II into stand-by I mode in CL context, for Redundant instrument
MOC procedure: **H_FCP_HIF_R221**

Initial state/mode	HIFI in Standby II with WBS laser2 On in CL context, redundant
Mois Procedure	HIFI_StandbyII_Laser2_to_StandbyI_CL_Redundant
Parameters	ObsID
Final State/mode	HIFI StandbII in CL context, redundant

12.3.7 HIFI global switch-off procedures

12.3.7.1 HIFI Global Switch-Off, Prime

Purpose: Switch off full Prime instrument from stand-by I mode in OL and CL contexts
MOC procedure: **H_FCP_HIF_NSOF**

Initial state/mode	HIFI in stand-byI, prime
Mois Procedure	HIFI_StandbyI_to_SwitchedOff_Prime
Parameters	ObsID
Final State/mode	HIFI Off

12.3.7.2 HIFI Global Switch-Off, Redundant

Purpose: Switch off full Redudant instrument from stand-by I mode in OL and CL contexts
MOC procedure: **H_FCP_HIF_RSOF**

Initial state/mode	HIFI in stand-by I, redudant
Mois Procedure	HIFI_StandbyI_to_SwitchedOff_Redundant
Parameters	ObsID
Final State/mode	HIFI Off

12.3.7.3 HIFI ICU Switch-Off from Rescue, Prime

Purpose: Switch off prime ICU from Rescue
MOC procedure: **H_CRP_HIF_NROF**

Initial state/mode	HIFI in rescue mode, prime
Mois Procedure	HIFI_Rescue_to_SwitchedOff_Prime
Parameters	ObsID
Final State/mode	HIFI Off

12.3.7.4 HIFI ICU Switch-Off from Rescue, Redundant

Purpose: Switch off redundant ICU from Rescue
MOC procedure: **H_CRP_HIF_RROF**

Initial state/mode	HIFI in rescue mode, redundant
Mois Procedure	HIFI_Rescue_to_SwitchedOff_Redundant
Parameters	ObsID

Final State/mode	HIFI Off

12.3.8 Transition from OL to CL context and vice-versa

12.3.8.1 HIFI switch from OL to CL context, Prime

Purpose: Switch the prime instrument from OL into CL context, keeping in stand-by I mode
MOC procedure: **H_COP_HIF_NCRS**

Initial state/mode	HIFI in stand-by I in OL context, prime
Mois Procedure	HIFI_StandbyI_OL_to_CL_Prime
Parameters	ObsID
Final State/mode	HIFI in stand-by I in CL context, prime

12.3.8.2 HIFI switch from OL to CL context, Redundant

Purpose: Switch the redundantt instrument from OL into CL context, keeping in stand-by I mode
MOC procedure: **H_COP_HIF_RCRS**

Initial state/mode	HIFI in stand-by I in OL context, redundant
Mois Procedure	HIFI_StandbyI_OL_to_CL_Redundant
Parameters	ObsID
Final State/mode	HIFI in stand-by I in CL context, redundant

12.3.8.3 HIFI switch from CL to OL context, Prime

Purpose: Switch the prime or instrument from CL into OL context, keeping in stand-by I mode
MOC procedure: **H_FCP_HIF_NRCS**

Initial state/mode	HIFI in stand-by I in CL context, prime
Mois Procedure	HIFI_StandbyI_CL_to_OL
Parameters	ObsID
Final State/mode	HIFI in stand-by I in OL context, prime

12.3.8.4 HIFI switch from CL to OL context, Redundant

Purpose: Switch the redundant instrument from CL into OL context, keeping in stand-by I mode
MOC procedure: **H_FCP_HIF_RRCS**

Initial state/mode	HIFI in stand-by I in CL context, prime

Mois Procedure	HIFI_StandbyI_CL_to_OL
Parameters	ObsID
Final State/mode	HIFI in stand-by I in OL context, prime

12.3.9 Check Procedures

12.3.9.1 HIFI OBS SFT

Purpose: Perform OBSW short functional test
MOC procedure: **H_FCP_HIF_COBS**

Initial state/mode	HIFI in intermediate mode
Mois Procedure	HIFI_OBS_SFT
Parameters	ObsID
Final State/mode	HIFI in intermediate mode

12.3.9.2 HIFI Chopper Open loop Set Health Check, Prime

Purpose: Perform step 1 of internal chopper integrity check once FPU is active, prime instrument
MOC procedure: **H_COP_HIF_NHC1**

Initial state/mode	HIFI in standby I in OL context, prime
Mois Procedure	HIFI_Chopper_openloop_set_health_check_Prime
Parameters	ObsID
Final State/mode	HIFI in standby I in OL context, prime

12.3.9.3 HIFI Chopper Open loop Set Health Check, Redundant

Purpose: Perform step 1 of internal chopper integrity check once FPU is active, redundant instrument
MOC procedure: **H_COP_HIF_RHC1**

Initial state/mode	HIFI in standby I in OL context, redundant
Mois Procedure	HIFI_Chopper_openloop_set_health_check_Redundant
Parameters	ObsID
Final State/mode	HIFI in standby I in OL context, redundant

12.3.9.4 HIFI Chopper Open loop Scan Health Check, Prime

Purpose: Perform step 2 of internal chopper integrity check once FPU is active, prime instrument
MOC procedure: **H_COP_HIF_NHC2**

Initial state/mode	HIFI in standby I in OL context, prime
Mois Procedure	HIFI_Chopper_openloop_scan_health_check_Prime
Parameters	ObsID
Final State/mode	HIFI in standby I in OL context, prime

12.3.9.5 HIFI Chopper Open loop Scan Health Check, Redundant

Purpose: Perform step 2 of internal chopper integrity check once FPU is active, redundant instrument
MOC procedure: **H_COP_HIF_RHC2**

Initial state/mode	HIFI in standby I in OL context, redundant
Mois Procedure	HIFI_Chopper_openloop_scan_health_check_Redundant
Parameters	ObsID
Final State/mode	HIFI in standby I in OL context, redundant

12.3.9.6 HIFI Chopper Closed Loop Health Check, Prime

Purpose: Perform step 3 of internal chopper integrity check once FPU is active.
MOC procedure: **H_FCP_HIF_NHC3**

Initial state/mode	HIFI in standby I in CL context, prime
Mois Procedure	HIFI_Chopper_closedloop_parameter_Prime
Parameters	ObsID
Final State/mode	HIFI in standby I in CL context, prime

12.3.9.7 HIFI Chopper Closed Loop Health Check, Redundant

Purpose: Perform step 3 of internal chopper integrity check once FPU is active.
MOC procedure: **H_FCP_HIF_RHC3**

Initial state/mode	HIFI in standby I in CL context, redundant
Mois Procedure	HIFI_Chopper_closedloop_parameter_Redundant
Parameters	ObsID
Final State/mode	HIFI in standby I in CL context, redundant

12.3.9.8 HIFI Peak-up simulation

Purpose: Perform peak up simulation test. OBSW will send peak report packet to ACMS.
MOC procedure: **H_FCP_HIF_CSPK**

Initial state/mode	HIFI primary, standby1 or standby2, in OL or CL context, prime

	or redundant
Mois Procedure	HIFI_Simulate_peakup
Parameters	ObsID
Final State/mode	HIFI primary, standby1 or standby2, in OL or CL context, prime or redundant

12.3.10 Local Oscillator Specific Procedures

12.3.10.1 HIFI Upload LCU Patches Flight, Prime and Redundant

Purpose: Upload LCU patch for Prime and Redundant sides
MOC procedure: **H_FCP_HIF_CUPM**

Initial state/mode	HIFI in stand-by I
Mois Procedure	HIFI_uploadLCU_patches_flight
Parameters	ObsID
Final State/mode	HIFI in stand-by I

12.3.10.2 HIFI Readback LCU Table Flight, Prime and Redundant

Purpose: Dump content of LCU safety table for Prime and Redundant sides
MOC procedure: **H_FCP_HIF_CRTM**

Initial state/mode	HIFI in stand-by I
Mois Procedure	HIFI_readback_LCU_table_flight
Parameters	ObsID
Final State/mode	HIFI in stand-by I

12.3.10.3 HIFI Upload LCU Table Flight, Prime

Purpose: Upload LCU safety tables for Prime side
MOC procedures: **H_FCP_HIF_NUT0 to H_FCP_HIF_NUTH**

Initial state/mode	HIFI in stand-by I
Mois Procedures	HIFI_upload_LCU_table_flight_Nominal_1-to-450 HIFI_upload_LCU_table_flight_Nominal_451-to-900 HIFI_upload_LCU_table_flight_Nominal_901-to-1350 HIFI_upload_LCU_table_flight_Nominal_1351-to-1800 HIFI_upload_LCU_table_flight_Nominal_1801-to-2250 HIFI_upload_LCU_table_flight_Nominal_2251-to-2700 HIFI_upload_LCU_table_flight_Nominal_2701-to-3150 HIFI_upload_LCU_table_flight_Nominal_3151-to-3600 HIFI_upload_LCU_table_flight_Nominal_3601-to-4050

	HIFI_upload_LCU_table_flight_Nominal_4051-to-4500 HIFI_upload_LCU_table_flight_Nominal_4501-to-4900 HIFI_upload_LCU_table_flight_Nominal_4951-to-5400 HIFI_upload_LCU_table_flight_Nominal_5401-to-5850 HIFI_upload_LCU_table_flight_Nominal_5851-to-6300 HIFI_upload_LCU_table_flight_Nominal_6301-to-6750 HIFI_upload_LCU_table_flight_Nominal_6751-to-7200 HIFI_upload_LCU_table_flight_Nominal_7201-to-7650 HIFI_upload_LCU_table_flight_Nominal_7651-to-7905
Parameters	ObsID TPF file containing the Prime safety table entries
Final State/mode	HIFI in stand-by I

12.3.10.4 HIFI Upload LCU Table Flight, Redundant

Purpose: Upload LCU safety tables for Redundant side
MOC procedures: **H_FCP_HIF_RUT0 to H_FCP_HIF_RUTH**

Initial state	HIFI in stand-by I
Mois Procedure	HIFI_upload_LCU_table_flight_Redundant_1-to-450 HIFI_upload_LCU_table_flight_Redundant_451-to-900 HIFI_upload_LCU_table_flight_Redundant_901-to-1350 HIFI_upload_LCU_table_flight_Redundant_1351-to-1800 HIFI_upload_LCU_table_flight_Redundant_1801-to-2250 HIFI_upload_LCU_table_flight_Redundant_2251-to-2700 HIFI_upload_LCU_table_flight_Redundant_2701-to-3150 HIFI_upload_LCU_table_flight_Redundant_3151-to-3600 HIFI_upload_LCU_table_flight_Redundant_3601-to-4050 HIFI_upload_LCU_table_flight_Redundant_4051-to-4500 HIFI_upload_LCU_table_flight_Redundant_4501-to-4900 HIFI_upload_LCU_table_flight_Redundant_4951-to-5400 HIFI_upload_LCU_table_flight_Redundant_5401-to-5850 HIFI_upload_LCU_table_flight_Redundant_5851-to-6300 HIFI_upload_LCU_table_flight_Redundant_6301-to-6750 HIFI_upload_LCU_table_flight_Redundant_6751-to-7200 HIFI_upload_LCU_table_flight_Redundant_7201-to-7650 HIFI_upload_LCU_table_flight_Redundant_7651-to-7905
Parameters	ObsID TPF file containing the Redundant safety table entries
Final State	HIFI in stand-by I

12.4 Commissioning operations procedures

In its commissioning phase, HIFI distinguishes between procedures to be executed manually (i.e. in the same fashion as the above nominal operation procedures) and those to be run on the MTL. Only the former are described in details here, and expected to have a flight procedure equivalent at the MOC. The latter are here simply listed and will be immediately uploaded at the MOC if the need for their use as a backup for the MPS occurs. None of these procedures requires interaction with the Spacon.

All Commissioning procedures are contained in Annex 3. They are currently attached as MOIS files, but flight procedures as prepared by MOC will be added wherever applicable.

12.4.1 Functional test procedures

12.4.1.1 HIFI WBS Functional Tests, Prime

Purpose: Run HIFI WBS Functional test from the Prime side
MOC procedure: **H_COP_HIF_CFWB**

Initial state/mode	Primary on Prime side
Mois Procedure	HIFI-COP-1.2-WBS_FT_Nominal
Parameters	ObsID
Final State/mode	Primary on Prime side

12.4.1.2 HIFI FPU Functional Tests, Prime

Purpose: Run HIFI FPU Functional test from the Prime side
MOC procedure: **H_COP_HIF_NFF1 to H_COP_HIF_NFF7**

Initial state/mode	Primary on Prime side
Mois Procedure	HIFI-COP-1.2-FPU_FT_B1_Nominal HIFI-COP-1.2-FPU_FT_B2_Nominal HIFI-COP-1.2-FPU_FT_B3_Nominal HIFI-COP-1.2-FPU_FT_B4_Nominal HIFI-COP-1.2-FPU_FT_B5_Nominal HIFI-COP-1.2-FPU_FT_B6_Nominal HIFI-COP-1.2-FPU_FT_B7_Nominal
Parameters	ObsID
Final State/mode	Primary on Prime side

12.4.1.3 HIFI FPU Functional Tests, Redundant

Purpose: Run HIFI FPU Functional test from the Redundant side
MOC procedure: **H_COP_HIF_RFF1 to H_COP_HIF_RFF7**

Initial state/mode	Primary
Mois Procedure	HIFI-COP-1.2-FPU_FT_B1_Redundant HIFI-COP-1.2-FPU_FT_B2_Redundant HIFI-COP-1.2-FPU_FT_B3_Redundant HIFI-COP-1.2-FPU_FT_B4_Redundant HIFI-COP-1.2-FPU_FT_B5_Redundant HIFI-COP-1.2-FPU_FT_B6_Redundant HIFI-COP-1.2-FPU_FT_B7_Redundant
Parameters	ObsID
Final State/mode	Primary

12.4.1.4 HIFI HRS Functional Tests, Prime

Purpose: Run HIFI HRS Functional test from the Prime side
MOC procedure: **H_COP_HIF_CFHR**

Initial state/mode	Primary on Prime side
Mois Procedure	HIFI-COP-1.2-HRS_FT_Nominal
Parameters	ObsID
Final State/mode	Primary on Prime side

12.4.1.5 HIFI Up-Converter Functional Tests, Prime

Purpose: Run HIFI WBS Functional test from the Prime side
MOC procedure: **H_COP_HIF_NFUP**

Initial state/mode	Primary on Prime side
Mois Procedure	HIFI-COP-1.2-UPC_FT_Nominal
Parameters	ObsID
Final State/mode	Primary on Prime side

12.4.1.6 HIFI Up-Converter Functional Tests, Redundant

Purpose: Run HIFI WBS Functional test from the Redundant side
MOC procedure: **H_COP_HIF_RFUP**

Initial state/mode	Primary on Redundant side
Mois Procedure	HIFI-COP-1.2-UPC_FT_Redundant
Parameters	ObsID
Final State/mode	Primary on Redundant side

12.4.1.7 HIFI LOU Functional Tests, Prime

Purpose: Run HIFI LOU Functional test from the Prime side

MOC procedure: **H_COP_HIF_NFL1 to H_COP_HIF_NFLE (corresponding to the 14 sub-bands 1a to 7b)**

Initial state/mode	Primary on Prime side
Mois Procedure	HIFI-COP-1.2-LO_FT_B1a_Prime HIFI-COP-1.2-LO_FT_B1b_Prime HIFI-COP-1.2-LO_FT_B2a_Prime HIFI-COP-1.2-LO_FT_B2b_Prime HIFI-COP-1.2-LO_FT_B3a_Prime HIFI-COP-1.2-LO_FT_B3b_Prime HIFI-COP-1.2-LO_FT_B4a_Prime HIFI-COP-1.2-LO_FT_B4b_Prime HIFI-COP-1.2-LO_FT_B5a_Prime HIFI-COP-1.2-LO_FT_B5b_Prime HIFI-COP-1.2-LO_FT_B6a_Prime HIFI-COP-1.2-LO_FT_B6b_Prime HIFI-COP-1.2-LO_FT_B7a_Prime HIFI-COP-1.2-LO_FT_B7b_Prime
Parameters	ObsID TPF files for bands 5a to 7b
Final State/mode	Primary on Prime side

12.4.1.8 HIFI LOU Functional Tests, Redundant

Purpose: Run HIFI LOU Functional test from the Redundant side
MOC procedure: **H_COP_HIF_RFL1 to H_COP_HIF_RFLE (corresponding to the 14 sub-bands 1a to 7b)**

Initial state/mode	Primary on Redundant side
Mois Procedure	HIFI-COP-1.2-LO_FT_B1a_Redundant HIFI-COP-1.2-LO_FT_B1b_Redundant HIFI-COP-1.2-LO_FT_B2a_Redundant HIFI-COP-1.2-LO_FT_B2b_Redundant HIFI-COP-1.2-LO_FT_B3a_Redundant HIFI-COP-1.2-LO_FT_B3b_Redundant HIFI-COP-1.2-LO_FT_B4a_Redundant HIFI-COP-1.2-LO_FT_B4b_Redundant HIFI-COP-1.2-LO_FT_B5a_Redundant HIFI-COP-1.2-LO_FT_B5b_Redundant HIFI-COP-1.2-LO_FT_B6a_Redundant HIFI-COP-1.2-LO_FT_B6b_Redundant HIFI-COP-1.2-LO_FT_B7a_Redundant HIFI-COP-1.2-LO_FT_B7b_Redundant
Parameters	ObsID TPF files for bands 5a to 7b
Final State/mode	Primary on Redundant side

12.4.2 Chopper response time tests

12.4.2.1 HIFI chopper response time, Prime

Purpose: Run chopper response time from the Prime side. This test cannot be run if the chopper health check tests have not proved successful.
MOC procedure: **H_COP_HIF_NCRT**

Initial state/mode	Primary on Prime side
Mois Procedure	HIFI-COP-2.1-CPR-RespTime_Nominal
Parameters	ObsID
Final State/mode	Primary on Prime side

12.4.2.2 HIFI chopper response time, Redundant

Purpose: Run chopper response time from the Redundant side. This test cannot be run if the chopper health check tests have not proved successful.
MOC procedure: **H_COP_HIF_RCRT**

Initial state/mode	Primary on Redundant side
Mois Procedure	HIFI-COP-2.1-CPR-RespTime_Redundantl
Parameters	ObsID
Final State/mode	Primary on Redundant side

12.4.3 LO purity tests

12.4.3.1 HIFI LO purity test in band 3b, Prime

Purpose: Run LO purity test on band 3b from the Prime side
MOC procedure: **H_COP_HIF_CSP3**

Initial state/mode	Primary on Prime side
Mois Procedure	HIFI-COP-3-Spur-B3b
Parameters	ObsID TPF files containing the multiplier inputs
Final State/mode	Primary on Prime side

12.4.3.2 HIFI LO purity test in band 7b, Prime

Purpose: Run LO purity test on band 7b from the Prime side
MOC procedure: **H_COP_HIF_CSP7**

Initial state/mode	Primary on Prime side

Mois Procedure	HIFI-COP-3-Spur-B7b
Parameters	ObsID TPF files containing the multiplier inputs
Final State/mode	Primary on Prime side

12.4.4 Other Commissioning procedures

The following matrix compiles all the remaining commissioning phase procedures. They are not expected to be run as manual procedures.

Commissioning name MOIS	Procedure name	Description
HIFI-COP-2.1-DipCal1_B3	H_COP_HIF_CD13	Diplexer calibration #1 band 3
HIFI-COP-2.1-DipCal1_B4	H_COP_HIF_CD14	Diplexer calibration #1 band 4
HIFI-COP-2.1-DipCal1_B6	H_COP_HIF_CD16	Diplexer calibration #1 band 6
HIFI-COP-2.1-DipCal1_B7	H_COP_HIF_CD17	Diplexer calibration #1 band 7
HIFI-COP-2.1-FTUnp_B1	H_COP_HIF_CFU1	Functional test un-pumped band 1
HIFI-COP-2.1-FTUnp_B2	H_COP_HIF_CFU2	Functional test un-pumped band 2
HIFI-COP-2.1-FTUnp_B3	H_COP_HIF_CFU3	Functional test un-pumped band 3
HIFI-COP-2.1-FTUnp_B4	H_COP_HIF_CFU4	Functional test un-pumped band 4
HIFI-COP-2.1-FTUnp_B5	H_COP_HIF_CFU5	Functional test un-pumped band 5
HIFI-COP-2.1-FTUnp_B6	H_COP_HIF_CFU6	Functional test un-pumped band 6
HIFI-COP-2.1-FTUnp_B7	H_COP_HIF_CFU7	Functional test un-pumped band 7
HIFI-COP-2.1-IF-FBk1_B1	H_COP_HIF_CIF1	IF feed-back test band 1
HIFI-COP-2.1-IF-FBk1_B2	H_COP_HIF_CIF2	IF feed-back test band 2
HIFI-COP-2.1-IF-FBk1_B3	H_COP_HIF_CIF3	IF feed-back test band 3
HIFI-COP-2.1-IF-FBk1_B4	H_COP_HIF_CIF4	IF feed-back test band 4
HIFI-COP-2.1-IF-FBk1_B5	H_COP_HIF_CIF5	IF feed-back test band 5
HIFI-COP-2.1-IF-FBk1_B6	H_COP_HIF_CIF6	IF feed-back test band 6
HIFI-COP-2.1-IF-FBk1_B7	H_COP_HIF_CIF7	IF feed-back test band 7
HIFI-COP-2.1-Stab-IF_B1	H_COP_HIF_CIS1	IF stability test band 1
HIFI-COP-2.1-Stab-IF_B2	H_COP_HIF_CIS2	IF stability test band 2
HIFI-COP-2.1-Stab-IF_B3	H_COP_HIF_CIS3	IF stability test band 3
HIFI-COP-2.1-Stab-IF_B4	H_COP_HIF_CIS4	IF stability test band 4
HIFI-COP-2.1-Stab-IF_B5	H_COP_HIF_CIS5	IF stability test band 5
HIFI-COP-2.1-Stab-IF_B6	H_COP_HIF_CIS6	IF stability test band 6
HIFI-COP-2.1-Stab-IF_B7	H_COP_HIF_CIS7	IF stability test band 7
HIFI-COP-2.2-DipCal2_B3	H_COP_HIF_CD23	Diplexer calibration #2 band 3
HIFI-COP-2.2-DipCal2_B4	H_COP_HIF_CD24	Diplexer calibration #2 band 4
HIFI-COP-2.2-DipCal2_B6	H_COP_HIF_CD26	Diplexer calibration #2 band 6
HIFI-COP-2.2-DipCal2_B7	H_COP_HIF_CD27	Diplexer calibration #2 band 7
HIFI-COP-2.2-VecscanCal_B1a	H_COP_HIF_CVS1	Vector Scan calibration band 1a
HIFI-COP-2.2-VecscanCal_B1b	H_COP_HIF_CVS2	Vector Scan calibration band 1b
HIFI-COP-2.2-VecscanCal_B2a	H_COP_HIF_CVS3	Vector Scan calibration band 2a
HIFI-COP-2.2-VecscanCal_B2b	H_COP_HIF_CVS4	Vector Scan calibration band 2b
HIFI-COP-2.2-VecscanCal_B3a	H_COP_HIF_CVS5	Vector Scan calibration band 3a
HIFI-COP-2.2-VecscanCal_B3b	H_COP_HIF_CVS6	Vector Scan calibration band 3b
HIFI-COP-2.2-VecscanCal_B4a	H_COP_HIF_CVS7	Vector Scan calibration band 4a

HIFI-COP-2.2-VecscanCal_B4b	H_COP_HIF_CVS8	Vector Scan calibration band 4b
HIFI-COP-2.2-VecscanCal_B5a	H_COP_HIF_CVS9	Vector Scan calibration band 5a
HIFI-COP-2.2-VecscanCal_B5b	H_COP_HIF_CVSA	Vector Scan calibration band 5b
HIFI-COP-2.2-VecscanCal_B6a	H_COP_HIF_CVSB	Vector Scan calibration band 6a
HIFI-COP-2.2-VecscanCal_B6b	H_COP_HIF_CVSC	Vector Scan calibration band 6b
HIFI-COP-2.2-VecscanCal_B7a	H_COP_HIF_CVSD	Vector Scan calibration band 7a
HIFI-COP-2.2-VecscanCal_B7b	H_COP_HIF_CVSE	Vector Scan calibration band 7b
HIFI-COP-2.3-CPR-Scan1_B1	H_COP_HIF_CCS1	Chopper scan band 1
HIFI-COP-2.3-CPR-Scan1_B2	H_COP_HIF_CCS2	Chopper scan band 2
HIFI-COP-2.3-CPR-Scan1_B3	H_COP_HIF_CCS3	Chopper scan band 3
HIFI-COP-2.3-CPR-Scan1_B4	H_COP_HIF_CCS4	Chopper scan band 4
HIFI-COP-2.3-CPR-Scan1_B5	H_COP_HIF_CCS5	Chopper scan band 5
HIFI-COP-2.3-CPR-Scan1_B6	H_COP_HIF_CCS6	Chopper scan band 6
HIFI-COP-2.3-CPR-Scan1_B7	H_COP_HIF_CCS7	Chopper scan band 7
HIFI-COP-3-Deflux	H_COP_HIF_CDFL	Heater deflux test for all bands
HIFI-COP-3-FTP_B1a	H_COP_HIF_CFP1	Functional test pumped band 1a
HIFI-COP-3-FTP_B1b	H_COP_HIF_CFP2	Functional test pumped band 1b
HIFI-COP-3-FTP_B2a	H_COP_HIF_CFP3	Functional test pumped band 2a
HIFI-COP-3-FTP_B2b	H_COP_HIF_CFP4	Functional test pumped band 2b
HIFI-COP-3-FTP_B3a	H_COP_HIF_CFP5	Functional test pumped band 3a
HIFI-COP-3-FTP_B3b	H_COP_HIF_CFP6	Functional test pumped band 3b
HIFI-COP-3-FTP_B4a	H_COP_HIF_CFP7	Functional test pumped band 4a
HIFI-COP-3-FTP_B4b	H_COP_HIF_CFP8	Functional test pumped band 4b
HIFI-COP-3-FTP_B5a	H_COP_HIF_CFP9	Functional test pumped band 5a
HIFI-COP-3-FTP_B5b	H_COP_HIF_CFPA	Functional test pumped band 5b
HIFI-COP-3-FTP_B6a	H_COP_HIF_CFPB	Functional test pumped band 6a
HIFI-COP-3-FTP_B6b	H_COP_HIF_CFPC	Functional test pumped band 6b
HIFI-COP-3-FTP_B7a	H_COP_HIF_CFPD	Functional test pumped band 7a
HIFI-COP-3-FTP_B7b	H_COP_HIF_CFPE	Functional test pumped band 7b
HIFI-COP-3-StWv1_B1a	H_COP_HIF_CSW1	Standing wave test band 1a
HIFI-COP-3-StWv1_B1b	H_COP_HIF_CSW2	Standing wave test band 1b
HIFI-COP-3-StWv1_B2a	H_COP_HIF_CSW3	Standing wave test band 2a
HIFI-COP-3-StWv1_B2b	H_COP_HIF_CSW4	Standing wave test band 2b
HIFI-COP-3-StWv1_B3a	H_COP_HIF_CSW5	Standing wave test band 3a
HIFI-COP-3-StWv1_B3b	H_COP_HIF_CSW6	Standing wave test band 3b
HIFI-COP-3-StWv1_B4a	H_COP_HIF_CSW7	Standing wave test band 4a
HIFI-COP-3-StWv1_B4b	H_COP_HIF_CSW8	Standing wave test band 4b
HIFI-COP-3-StWv1_B5a	H_COP_HIF_CSW9	Standing wave test band 5a
HIFI-COP-3-StWv1_B5b	H_COP_HIF_CSWA	Standing wave test band 5b
HIFI-COP-3-StWv1_B6a	H_COP_HIF_CSWB	Standing wave test band 6a
HIFI-COP-3-StWv1_B6b	H_COP_HIF_CSWC	Standing wave test band 6b
HIFI-COP-3-StWv1_B7a	H_COP_HIF_CSWD	Standing wave test band 7a
HIFI-COP-3-StWv1_B7b	H_COP_HIF_CSWE	Standing wave test band 7b
HIFI-COP-3-Tsys_B1a	H_COP_HIF_CTS1	Tsys survey band 1a
HIFI-COP-3-Tsys_B1b	H_COP_HIF_CTS2	Tsys survey band 1b
HIFI-COP-3-Tsys_B2a	H_COP_HIF_CTS3	Tsys survey band 2a
HIFI-COP-3-Tsys_B2b	H_COP_HIF_CTS4	Tsys survey band 2b
HIFI-COP-3-Tsys_B3a	H_COP_HIF_CTS5	Tsys survey band 3a

HIFI-COP-3-Tsys_B3b	H_COP_HIF_CTS6	Tsys survey band 3b
HIFI-COP-3-Tsys_B4a	H_COP_HIF_CTS7	Tsys survey band 4a
HIFI-COP-3-Tsys_B4b	H_COP_HIF_CTS8	Tsys survey band 4b
HIFI-COP-3-Tsys_B5a	H_COP_HIF_CTS9	Tsys survey band 5a
HIFI-COP-3-Tsys_B5b	H_COP_HIF_CTSA	Tsys survey band 5b
HIFI-COP-3-Tsys_B6a	H_COP_HIF_CTSB	Tsys survey band 6a
HIFI-COP-3-Tsys_B6b	H_COP_HIF_CTSC	Tsys survey band 6b
HIFI-COP-3-Tsys_B7a	H_COP_HIF_CTSD	Tsys survey band 7a
HIFI-COP-3-Tsys_B7b	H_COP_HIF_CTSE	Tsys survey band 7b
HIFI-COP-3-Stab-1_B1a_stab	H_COP_HIF_CSS1	Stability test: stabilization band 1a
HIFI-COP-3-Stab-1_B1b_stab	H_COP_HIF_CSS2	Stability test: stabilization band 1b
HIFI-COP-3-Stab-1_B2a_stab	H_COP_HIF_CSS3	Stability test: stabilization band 2a
HIFI-COP-3-Stab-1_B2b_stab	H_COP_HIF_CSS4	Stability test: stabilization band 2b
HIFI-COP-3-Stab-1_B3a_stab	H_COP_HIF_CSS5	Stability test: stabilization band 3a
HIFI-COP-3-Stab-1_B3b_stab	H_COP_HIF_CSS6	Stability test: stabilization band 3b
HIFI-COP-3-Stab-1_B4a_stab	H_COP_HIF_CSS7	Stability test: stabilization band 4a
HIFI-COP-3-Stab-1_B4b_stab	H_COP_HIF_CSS8	Stability test: stabilization band 4b
HIFI-COP-3-Stab-1_B5a_stab	H_COP_HIF_CSS9	Stability test: stabilization band 5a
HIFI-COP-3-Stab-1_B5b_stab	H_COP_HIF_CSSA	Stability test: stabilization band 5b
HIFI-COP-3-Stab-1_B6a_stab	H_COP_HIF_CSSB	Stability test: stabilization band 6a
HIFI-COP-3-Stab-1_B6b_stab	H_COP_HIF_CSSC	Stability test: stabilization band 6b
HIFI-COP-3-Stab-1_B7a_stab	H_COP_HIF_CSSD	Stability test: stabilization band 7a
HIFI-COP-3-Stab-1_B7b_stab	H_COP_HIF_CSSE	Stability test: stabilization band 7b
HIFI-COP-3-Stab-1_B1a_sys	H_COP_HIF_CSY1	Stability test: system band 1a
HIFI-COP-3-Stab-1_B1b_sys	H_COP_HIF_CSY2	Stability test: system band 1b
HIFI-COP-3-Stab-1_B2a_sys	H_COP_HIF_CSY3	Stability test: system band 2a
HIFI-COP-3-Stab-1_B2b_sys	H_COP_HIF_CSY4	Stability test: system band 2b
HIFI-COP-3-Stab-1_B3a_sys	H_COP_HIF_CSY5	Stability test: system band 3a
HIFI-COP-3-Stab-1_B3b_sys	H_COP_HIF_CSY6	Stability test: system band 3b
HIFI-COP-3-Stab-1_B4a_sys	H_COP_HIF_CSY7	Stability test: system band 4a
HIFI-COP-3-Stab-1_B4b_sys	H_COP_HIF_CSY8	Stability test: system band 4b
HIFI-COP-3-Stab-1_B5a_sys	H_COP_HIF_CSY9	Stability test: system band 5a
HIFI-COP-3-Stab-1_B5b_sys	H_COP_HIF_CSYA	Stability test: system band 5b
HIFI-COP-3-Stab-1_B6a_sys	H_COP_HIF_CSYB	Stability test: system band 6a
HIFI-COP-3-Stab-1_B6b_sys	H_COP_HIF_CSYC	Stability test: system band 6b
HIFI-COP-3-Stab-1_B7a_sys	H_COP_HIF_CSYD	Stability test: system band 7a
HIFI-COP-3-Stab-1_B7b_sys	H_COP_HIF_CSYE	Stability test: system band 7b
HIFI-COP-3-Stab-1_B1a_int	H_COP_HIF_CSI1	Stability test: int. loads band 1a
HIFI-COP-3-Stab-1_B1b_int	H_COP_HIF_CSI2	Stability test: int. loads band 1b
HIFI-COP-3-Stab-1_B2a_int	H_COP_HIF_CSI3	Stability test: int. loads band 2a
HIFI-COP-3-Stab-1_B2b_int	H_COP_HIF_CSI4	Stability test: int. loads band 2b
HIFI-COP-3-Stab-1_B3a_int	H_COP_HIF_CSI5	Stability test: int. loads band 3a
HIFI-COP-3-Stab-1_B3b_int	H_COP_HIF_CSI6	Stability test: int. loads band 3b
HIFI-COP-3-Stab-1_B4a_int	H_COP_HIF_CSI7	Stability test: int. loads band 4a
HIFI-COP-3-Stab-1_B4b_int	H_COP_HIF_CSI8	Stability test: int. loads band 4b
HIFI-COP-3-Stab-1_B5a_int	H_COP_HIF_CSI9	Stability test: int. loads band 5a
HIFI-COP-3-Stab-1_B5b_int	H_COP_HIF_CSIA	Stability test: int. loads band 5b
HIFI-COP-3-Stab-1_B6a_int	H_COP_HIF_CSIB	Stability test: int. loads band 6a

HIFI-COP-3-Stab-1_B6b_int	**H_COP_HIF_CSIC**	Stability test: int. loads band 6b
HIFI-COP-3-Stab-1_B7a_int	**H_COP_HIF_CSID**	Stability test: int. loads band 7a
HIFI-COP-3-Stab-1_B7b_int	**H_COP_HIF_CSIE**	Stability test: int. loads band 7b
HIFI-COP-3-Stab-1_B1a_fsw	**H_COP_HIF_CSF1**	Stability test: FSW band 1a
HIFI-COP-3-Stab-1_B1b_fsw	**H_COP_HIF_CSF2**	Stability test: FSW band 1b
HIFI-COP-3-Stab-1_B2a_fsw	**H_COP_HIF_CSF3**	Stability test: FSW band 2a
HIFI-COP-3-Stab-1_B2b_fsw	**H_COP_HIF_CSF4**	Stability test: FSW band 2b
HIFI-COP-3-Stab-1_B3a_fsw	**H_COP_HIF_CSF5**	Stability test: FSW band 3a
HIFI-COP-3-Stab-1_B3b_fsw	**H_COP_HIF_CSF6**	Stability test: FSW band 3b
HIFI-COP-3-Stab-1_B4a_fsw	**H_COP_HIF_CSF7**	Stability test: FSW band 4a
HIFI-COP-3-Stab-1_B4b_fsw	**H_COP_HIF_CSF8**	Stability test: FSW band 4b
HIFI-COP-3-Stab-1_B5a_fsw	**H_COP_HIF_CSF9**	Stability test: FSW band 5a
HIFI-COP-3-Stab-1_B5b_fsw	**H_COP_HIF_CSFA**	Stability test: FSW band 5b
HIFI-COP-3-Stab-1_B6a_fsw	**H_COP_HIF_CSFB**	Stability test: FSW band 6a
HIFI-COP-3-Stab-1_B6b_fsw	**H_COP_HIF_CSFC**	Stability test: FSW band 6b
HIFI-COP-3-Stab-1_B7a_fsw	**H_COP_HIF_CSFD**	Stability test: FSW band 7a
HIFI-COP-3-Stab-1_B7b_fsw	**H_COP_HIF_CSFE**	Stability test: FSW band 7b
HIFI-COP-4-Stab-2_B1a_dbs	**H_COP_HIF_CSD1**	Stability test: DBS band 1a
HIFI-COP-4-Stab-2_B1b_dbs	**H_COP_HIF_CSD2**	Stability test: DBS band 1b
HIFI-COP-4-Stab-2_B2a_dbs	**H_COP_HIF_CSD3**	Stability test: DBS band 2a
HIFI-COP-4-Stab-2_B2b_dbs	**H_COP_HIF_CSD4**	Stability test: DBS band 2b
HIFI-COP-4-Stab-2_B3a_dbs	**H_COP_HIF_CSD5**	Stability test: DBS band 3a
HIFI-COP-4-Stab-2_B3b_dbs	**H_COP_HIF_CSD6**	Stability test: DBS band 3b
HIFI-COP-4-Stab-2_B4a_dbs	**H_COP_HIF_CSD7**	Stability test: DBS band 4a
HIFI-COP-4-Stab-2_B4b_dbs	**H_COP_HIF_CSD8**	Stability test: DBS band 4b
HIFI-COP-4-Stab-2_B5a_dbs	**H_COP_HIF_CSD9**	Stability test: DBS band 5a
HIFI-COP-4-Stab-2_B5b_dbs	**H_COP_HIF_CSDA**	Stability test: DBS band 5b
HIFI-COP-4-Stab-2_B6a_dbs	**H_COP_HIF_CSDB**	Stability test: DBS band 6a
HIFI-COP-4-Stab-2_B6b_dbs	**H_COP_HIF_CSDC**	Stability test: DBS band 6b
HIFI-COP-4-Stab-2_B7a_dbs	**H_COP_HIF_CSDD**	Stability test: DBS band 7a
HIFI-COP-4-Stab-2_B7b_dbs	**H_COP_HIF_CSDE**	Stability test: DBS band 7b
HIFI-COP-4-Stab-2_B1a_lsw	**H_COP_HIF_CSL1**	Stability test: load-chop band 1a
HIFI-COP-4-Stab-2_B1b_lsw	**H_COP_HIF_CSL2**	Stability test: load-chop band 1b
HIFI-COP-4-Stab-2_B2a_lsw	**H_COP_HIF_CSL3**	Stability test: load-chop band 2a
HIFI-COP-4-Stab-2_B2b_lsw	**H_COP_HIF_CSL4**	Stability test: load-chop band 2b
HIFI-COP-4-Stab-2_B3a_lsw	**H_COP_HIF_CSL5**	Stability test: load-chop band 3a
HIFI-COP-4-Stab-2_B3b_lsw	**H_COP_HIF_CSL6**	Stability test: load-chop band 3b
HIFI-COP-4-Stab-2_B4a_lsw	**H_COP_HIF_CSL7**	Stability test: load-chop band 4a
HIFI-COP-4-Stab-2_B4b_lsw	**H_COP_HIF_CSL8**	Stability test: load-chop band 4b
HIFI-COP-4-Stab-2_B5a_lsw	**H_COP_HIF_CSL9**	Stability test: load-chop band 5a
HIFI-COP-4-Stab-2_B5b_lsw	**H_COP_HIF_CSLA**	Stability test: load-chop band 5b
HIFI-COP-4-Stab-2_B6a_lsw	**H_COP_HIF_CSLB**	Stability test: load-chop band 6a
HIFI-COP-4-Stab-2_B6b_lsw	**H_COP_HIF_CSLC**	Stability test: load-chop band 6b
HIFI-COP-4-Stab-2_B7a_lsw	**H_COP_HIF_CSLD**	Stability test: load-chop band 7a
HIFI-COP-4-Stab-2_B7b_lsw	**H_COP_HIF_CSLE**	Stability test: load-chop band 7b

12.4.5 List of used BBID

We list here all BBID used for the FM blocks. As a rule, all BBID start at 3000 and end at 3999, to avoid confusion with other blocks. Also, all FM blocks end up with "*_fm*".

- FCU_config_mxdp_block_fm HIFI 3990
- Diplexer_engineering_scan_block_fm HIFI 3696
- Chopper_closed_loop_parameter_check_block_fm HIFI 3695
- Chopper_openloop_set_block_fm HIFI 3693
- Chopper_openloop_scan_block_fm HIFI 3694
- Chopper_openloop_scan_warm_block_fm HIFI 3794
- Set_Diplexer_current_block_fm HIFI 3643
- Set_Diplexer_current_FSW_block_fm HIFI 3743
- Set_Magnet_current_block_fm HIFI 3644
- Upconverter_switch_off_block_fm HIFI 3645
- Chopper_Rotation_block_fm HIFI 3646
- Single_FPU_Param_Change_block_fm HIFI 3648
- Diplexer_scan_fast_fm HIFI 3251
- Scan_diplexer_block_fm HIFI 3254
- Scan_diplexer_IF_block_fm HIFI 3255
- Chopper_scan_fm HIFI 3260
- Chopper_scan_nospectra_fm HIFI 3261
- Magnet_scan_fast_fm HIFI 3270
- Magnet_scan_slow_fm HIFI 3271
- Band0warm_hbb_on_fm HIFI 3295
- Band0_hbb_on_fm HIFI 3298
- Band0_chopper_on_fm HIFI 3297
- Band0_chopper_at_zero_block_fm HIFI 3296
- Magnet_tuning_block_fm HIFI 3609
- Magnet_tuning_expert_block_fm HIFI 3619
- Init_MSA_fm HIFI 3200
- Init_MSA_H_fm HIFI 3207
- Init_MSA_V_fm HIFI 3208
- Magnet_scan_coarse_fm HIFI 3201
- Magnet_set_coarse_with_IVcurve_fm HIFI 3202
- Magnet_scan_fine_fm HIFI 3203
- Magnet_set_fine_with_IVcurve_fm HIFI 3204
- Mixerbias_block_fm HIFI 3205
- Chopper_block_fm HIFI 3206
- IVcurve_general_fm HIFI 3210
- IVcurve_raw_fm HIFI 3211
- IVcurve_defluxed_fm HIFI 3212
- IVcurve_pumped_fm HIFI 3213

- IVcurve_with_zero_magnet_fm HIFI 3214
- Heater_fm HIFI 3240
- Heater_warm_fm HIFI 3241
- Band0_fm HIFI 3299
- FT_FPU_check_IF_fm HIFI 3800
- FT_FPU_check_cryohealth_fm HIFI 3801
- FT_FPU_magnet_tune_fine_fm HIFI 3802
- HRS_functional_test_No_0_block_fm HIFI 3610
- HRS_functional_test_No_1_block_fm HIFI 3611
- HRS_functional_test_No_2_Sine_block_fm HIFI 3620
- HRS_functional_test_No_2_Square_s_block_fm HIFI 3621
- HRS_functional_test_No_2_Square_m_block_fm HIFI 3622
- HRS_functional_test_No_2_Corr_block_fm HIFI 3623
- HRS_functional_test_No_4_block_fm HIFI 3640
- Virtual_Machine_Test_block_fm HIFI 3650
- HRS_linearity_indiv_block_fm HIFI 3660
- FT_confspec_delHRS_block_fm HIFI 3810
- FT_confspec_delWBS_block_fm HIFI 3811
- FT_confspec_taccWBS_block_fm HIFI 3812
- FT_confspec_taccHRS_block_fm HIFI 3813
- FT_confspec_rHRS_block_fm HIFI 3814
- FT_confspec_Backendsel_block_fm HIFI 3815
- FT_confspec_n_integr_block_fm HIFI 3816
- FT_confspec_rshift_block_fm HIFI 3817
- FT_WBS_heater_fm HIFI 3700
- FT_WBS_att_fm HIFI 3701
- FT_WBS_att_laser2_fm HIFI 3702
- FT_WBS_att_overall_fm HIFI 3706
- FT_WBS_att_overall_COMB_fm HIFI 3714
- FT_WBS_att_individual_fm HIFI 3707
- FT_WBS_att_individual_COMB_fm HIFI 3715
- FT_WBS_BraggCell_att_fm HIFI 3711
- FT_WBS_BraggCell_HotCold_fm HIFI 3712
- Gascell_init_block_fm HIFI 3647
- Shutter_rotate_block_fm HIFI 3692
- GasCell_set_valve_closed_fm HIFI 3400
- GasCell_fill_fm HIFI 3401
- GasCell_empty_fm HIFI 3402
- HC_Hot_empty_cell_fm HIFI 3413
- HC_Cold_empty_cell_fm HIFI 3412
- HC_Hot_filled_cell_fm HIFI 3415
- HC_Cold_filled_cell_fm HIFI 3414
- HC_Hot_empty_cell_FSW_fm HIFI 3533
- HC_Cold_empty_cell_FSW_fm HIFI 3532
- HC_Hot_filled_cell_FSW_fm HIFI 3535
- HC_Cold_filled_cell_FSW_fm HIFI 3534

- HC_Hot_empty_cell_slowchop_fm HIFI 3513
- HC_Cold_empty_cell_slowchop_fm HIFI 3512
- HC_Hot_filled_cell_slowchop_fm HIFI 3515
- HC_Cold_filled_cell_slowchop_fm HIFI 3514
- HC_Hot_empty_cell_fastchop_fm HIFI 3543
- HC_Cold_empty_cell_fastchop_fm HIFI 3542
- HC_Hot_filled_cell_fastchop_fm HIFI 3545
- HC_Cold_filled_cell_fastchop_fm HIFI 3544
- HEB_Imix_calibration_block_fm HIFI 3918
- Fast_Imix_block_fm HIFI 3795
- OBS_SFT_block_fm HIFI 3922
- HIFI_goto_SAFE_block_fm HIFI 3920
- HIFI_global_switch_off_block_fm HIFI 3921
- Cold_spectra_fm HIFI 3222
- Hot_spectra_fm HIFI 3223
- Hot_cold_slowchop_fm HIFI 3224
- Hot_cold_fastchop_fm HIFI 3225
- Hot_spectra_FSW_fm HIFI 3233
- Cold_spectra_FSW_fm HIFI 3234
- Spectra_resistive_high_fm HIFI 3230
- Spectra_resistive_low_fm HIFI 3231
- HRS_tune_block_fm HIFI 3601
- HRS_tune_fast_block_fm HIFI 3991
- HRS_config_block_fm HIFI 3632
- HRS_config_w_switch_block_fm HIFI 3713
- HRS_config_resol_block_fm HIFI 3618
- HRS_config_att_lo_block_fm HIFI 3624
- HRS_config_att_lo_w_lo_input_block_fm HIFI 3679
- HRS_standby_block_fm HIFI 3633
- HRS_config_max_att_block_fm HIFI 3634
- HRS_config_min_att_block_fm HIFI 3635
- Switch_HK_block_fm HIFI 3905
- HIFI_notify_PDU_status_on_block_fm HIFI 3655
- HIFI_notify_PDU_status_off_block_fm HIFI 3654
- HIFI_Housekeeping_on_block_fm HIFI 3656
- HIFI_force_boot_block_fm HIFI 3600
- LcuSafetyTableUpload_fm HIFI 3900
- LcuSafetyTableReadback_fm HIFI 3901
- LcuMemoryPatchUpload_fm HIFI 3902
- LcuMemoryPatchReadback_fm HIFI 3903
- LcuChecksumRecalc_fm HIFI 3904
- Linearity_init_fm HIFI 3430
- Linearity_init_intload_fm HIFI 3431
- Linearity_init_extload_fm HIFI 3432
- HC_hot_BB2_hot_fm HIFI 3460
- HC_hot_BB2_hot_slowchop_fm HIFI 3560

- HC_cold_BB2_hot_fm HIFI 3461
- HC_cold_BB2_hot_slowchop_fm HIFI 3561
- HC_hot_BB2_cold_fm HIFI 3462
- HC_hot_BB2_cold_slowchop_fm HIFI 3562
- HC_cold_BB2_cold_fm HIFI 3463
- HC_cold_BB2_cold_slowchop_fm HIFI 3563
- HC_Hot_Line_ON_fm HIFI 3464
- HC_Hot_Line_OFF_fm HIFI 3465
- HC_Cold_Line_ON_fm HIFI 3466
- HC_Cold_Line_OFF_fm HIFI 3467
- AHBB_Line_ON_fm HIFI 3468
- AHBB_Line_OFF_fm HIFI 3469
- Shutter_Line_ON_fm HIFI 3470
- Shutter_Line_OFF_fm HIFI 3471
- Hot_Line_ON_fm HIFI 3472
- Hot_Line_OFF_fm HIFI 3473
- Cold_Line_ON_fm HIFI 3474
- Cold_Line_OFF_fm HIFI 3475
- HL_heater_block_fm HIFI 3615
- HL_heater_test_block_fm HIFI 3915
- LCU_Read_TM_pages_block_fm HIFI 3668
- LCU_disable_FreqTMY_check_block_fm HIFI 3667
- LCU_enable_FreqTMY_check_block_fm HIFI 3669
- LCU_CLEAR_ERROR_block_fm HIFI 3666
- View_SafetyTablePage_block_fm HIFI 3665
- LCU_DC_health_check_block_fm HIFI 3699
- Conf_diag_LCU_block_fm HIFI 3662
- Measure_LCU_IV_block_fm HIFI 3663
- Set_LO_Nominal_block_fm HIFI 3626
- Set_LO_Diagnostic_block_fm HIFI 3664
- Vector_scan_block_fm HIFI 3627
- Vector_scan_BLUE_LIMIT_block_fm HIFI 3672
- Vector_scan_AroundBestGuess_block_fm HIFI 3673
- Vector_scan_EXPERT_w_M1_block_fm HIFI 3771
- Vector_scan_EXPERT_block_fm HIFI 3671
- LO_tuning_investigation_block_fm HIFI 3674
- LO_tuning_w_M1_block_fm HIFI 3716
- LO_tuning_block_fm HIFI 3616
- LO_tuning_HEB_block_fm HIFI 3677
- LO_tuning_FSW_block_fm HIFI 3676
- LO_tuning_w_mixerchoice_block_fm HIFI 3675
- LO_tuning_EXPERT_block_fm HIFI 3613
- LO_tuning_w_targetC_block_fm HIFI 3628
- LCU_standby_block_fm HIFI 3629
- LCU_switch_off_block_fm HIFI 3631
- LCU_config_nominal_noretune_block_fm HIFI 3614

- HIFI_Configure_LCU_block_fm HIFI 3617
- HIFI_Configure_LCU_w_TMPageDump_block_fm HIFI 3917
- HIFI_Configure_LCU_ALL_block_fm HIFI 3670
- Conf_diag_LCU_EXPERT_block_fm HIFI 3678
- PDU_switch_on_block_fm HIFI 3657
- PDU_switch_on_all_block_fm HIFI 3658
- PDU_switch_off_block_fm HIFI 3659
- PDU_switch_off_all_block_fm HIFI 3661
- Peakup_test_configure_block_fm HIFI 3820
- Peakup_test_acquire_data_block_fm HIFI 3821
- Hot_spectra_external_block_fm HIFI 3523
- Cold_spectra_external_block_fm HIFI 3522
- Hot_spectra_w_shutter_open_fm HIFI 3226
- Cold_spectra_w_shutter_open_fm HIFI 3227
- Hot_spectra_w_shutter_closed_fm HIFI 3235
- Cold_spectra_w_shutter_closed_fm HIFI 3236
- Intcold_Extcold_fastchop_fm HIFI 3228
- Intcold_Exthot_fastchop_fm HIFI 3229
- Hot_cold_fastchop_w_shutter_open_fm HIFI 3232
- Hot_cold_fastchop_w_shutter_closed_fm HIFI 3237
- Radiometry_init_fm HIFI 3421
- Radiometry_stability_fm HIFI 3521
- REI_calibrate_block_fm HIFI 3910
- REI_goto_abs_block_fm HIFI 3911
- REI_goto_rel_block_fm HIFI 3912
- REI_goto_band_block_fm HIFI 3913
- Reimager_scan_fm HIFI 3914
- Chopper_Response_time_EXPERT_block_fm HIFI 3686
- Chopper_Response_time_block_fm HIFI 3687
- LO_Settling_time_first_tuning_fm HIFI 3680
- LO_Settling_time_second_tuning_fm HIFI 3681
- LO_Settling_time_third_tuning_fm HIFI 3682
- FPU_Settling_time_first_tuning_fm HIFI 3683
- FPU_Settling_time_second_tuning_fm HIFI 3684
- FPU_Settling_time_third_tuning_fm HIFI 3685
- FSW_Response_time_block_fm HIFI 3688
- FSW_Response_time_HRSConfig_block_fm HIFI 3689
- Switch_ONOFF_SRC_block_fm HIFI 3652
- Set_SRC_Frequency_block_fm HIFI 3651
- Set_SRC_Power_block_fm HIFI 3649
- Set_SRC_Freq_Power_block_fm HIFI 3653
- Spurious_init_fm HIFI 3450
- HC_spurious_line_ON_fm HIFI 3452
- HC_spurious_line_OFF_fm HIFI 3453
- Spur_freq_switch_block_fm HIFI 3691
- Total_power_integration_block_fm HIFI 3630

- Spectro_total_power_block_fm HIFI 3606
- Spectro_slow_chop_block_fm HIFI 3607
- Spectro_fast_chop_block_fm HIFI 3608
- Spectro_freq_switch_block_fm HIFI 3612
- Stability_fast_block_fm HIFI 3436
- Stability_intcold_inthot_fm HIFI 3423
- Stability_intcold_extcold_fm HIFI 3424
- Stability_intcold_exthot_fm HIFI 3434
- Stability_dbs_fm HIFI 3435
- Stability_freqswitch_fm HIFI 3433
- Stability_inthot_fm HIFI 3425
- Stability_intcold_fm HIFI 3426
- Stability_extcold_fm HIFI 3437
- Stability_backend_fm HIFI 3428
- Stability_backend_fastchop_fm HIFI 3418
- Stability_noIF1_fm HIFI 3429
- Stability_IF_system_fm HIFI 3422
- Stability_init_fm HIFI 3427
- Init_noIF1_fm HIFI 3209
- Init_all_IF_fm HIFI 3215
- Thermal_fm HIFI 3280
- Thermal_warm_fm HIFI 3283
- Thermal_fast_fm HIFI 3281
- H_diplexer_scan_fm HIFI 3252
- V_diplexer_scan_fm HIFI 3253
- Switch_zero_comb_block_fm HIFI 3717
- Laser_T_check_on_fm HIFI 3704
- Laser_T_check_off_fm HIFI 3705
- WBS_standby_fm HIFI 3703
- WBS_reset_block_fm HIFI 3602
- WBS_tune_block_fm HIFI 3603
- WBS0_fm HIFI 3604
- WBS_set_Latchup_block_fm HIFI 3697
- WBS_comb_fm HIFI 3605
- WBS_calibration_block_fm HIFI 3796
- WBS_config_block_fm HIFI 3625
- WBS_config_w_laser_and_att_block_fm HIFI 3636
- WBS_config_w_laser_block_fm HIFI 3637
- WBS_config_max_att_block_fm HIFI 3638
- WBS_config_min_att_block_fm HIFI 3639
- WBS_config_max_att_w_laser_block_fm HIFI 3641
- WBS_config_min_att_w_laser_block_fm HIFI 3642
- Simulated_LO_tune_block_fm HIFI 3690

12.4.6 Importing a new CUS release

Once a dedicated database has been setup and is available under the testing environment (MAUI), one just has to issue two dedicated shell scripts (the order is not important):

- cus_ fm_V.v_import.csh (V.v stands for the version number)
- config_fm_V.v_import.csh

12.4.7 The configuration files.

Although a more detailed description of the way the configuration files are handled is given somewhere else (ICC/2005-017), we list here all the ascii look-up tables that need to be imported to the database in order to successfully call a given CUS script.

Master files:

- configuration_masterfile
- configuration_masterfile_warm

Band dedicated master file:

- Band0.config
- Band1cold.config
- Band1warm.config
- Band2cold.config
- Band2warm.config
- Band3cold.config
- Band3warm.config
- Band4cold.config
- Band4warm.config
- Band5cold.config
- Band5warm.config
- Band6Hcold.config
- Band6Hwarm.config
- Band6Lcold.config
- Band6Lwarm.config

Sub-topic look-up table files:

- Diplexer settings: frequency dependent
    - configdiplexer_b3.config
    - configdiplexer_b4.config
    - configdiplexer_b5.config
    - configdiplexer_b6H.config
    - configdiplexer_b6L.config
- FPU “default” settings: non-frequency dependent
    - configfpu_b0.config

  - configfpu_b1cold.config
  - configfpu_b1warm.config
  - configfpu_b3cold.config
  - configfpu_b3warm.config
  - configfpu_b5cold.config
  - configfpu_b5warm.config
- Gascell related parameters: configgascell.config
- HRS settings for a given resolution mode:
  - confighrs.config
  - confighrs_hr.config
  - confighrs_lr.config
  - confighrs_mr.config
  - confighrs_wb1.config
  - confighrs_wb2.config
  - confighrs_wb3.config
  - confighrs_wb4.config
- LCU settings in tuned and safe modes respectively: frequency dependent
  - configlcu1a.config
  - configlcu1a_safe.config
  - configlcu1b.config
  - configlcu1b_safe.config
  - configlcu3a.config
  - configlcu3a_safe.config
  - configlcu3b.config
  - configlcu3b_safe.config
  - configlcu5a.config
  - configlcu5a_safe.config
  - configlcu5b.config
  - configlcu5b_safe.config
- LCU settings common to all frequencies of a given band: non-frequency dependent.
  - configlo1.config
  - configlo2.config
  - configlo3.config
  - configlo4.config
  - configlo5.config
  - configlo6H.config
  - configlo6L.config
- Not yet in use: mixer settings that would depend on frequency. Ex. Here with band3: configmixer_b3cold.config
- Spectroscopy “default” parameters: configspec.config
- WBS “default” parameters: configwbs.config

12.5 Contingency recovery procedures

The HIFI instrument and its operations has been designed such that the instrument acquires a safe mode in case unexpected conditions.

In most cases the instrument recovers with the next observation.

In case such conditions are encountered, the HIFI ICC shall be notified immediately.

Summary of anomalies and contingency procedures (details are listed in Annex 3):

Symptom	**Detected by**	**Contingency Procedure**	**Possible Recovery**
loss of image quality	ICC		none
anomalous calibrator temperature	ESOC	Notify HIFI ICC	none
no science data	ICC		switch to redundant ICU
no science data	ICC		none
no science data	ICC		switch to redundant laser
no HK from FCU	ESOC	Notify HIFI ICC	switch to redundant ICU
no HK or anomalous HK from FCU	ESOC	Notify HIFI ICC	switch to redundant ICU
no HK or anomalous HK from FCU	ESOC	Notify HIFI ICC	none
anomalous HK values	ESOC	Notify HIFI ICC	switch to redundant ICU
anomalous HK values	ESOC	Notify HIFI ICC	none
anomalous science data	ICC		switch to redundant ICU
anomalous science data	ICC		none
anomalous calibrator data	ICC		switch to redundant ICU
no HK from HRS-h	ICC		switch to redundant ICU
no HK from HRS-h	ESOC	Notify HIFI ICC	none
anomalous science data from HRS-h	ICC		none
no science data from HRS-h	ICC		none
no science data from HRS-h when switched over	ICC		none
no TM data from HIFI	CDMS	Notify HIFI ICC	switch to redundant ICU
no TM data from HIFI	CDMS	Notify HIFI ICC	switch to bus B
primary power: current= 0A	ESOC	Notify HIFI ICC	switch to redundant ICU
primary power: LCL tripped	ESOC	Notify HIFI ICC	switch to redundant ICU
no HK data from HIFI	ESOC	Notify HIFI ICC	switch to redundant ICU
no Science/HK data from HRS and WBS	ICC		switch to redundant

Symptom	Detected by	Contingency Procedure	Possible Recovery
			ICU
unable to start-up	ESOC	Notify HIFI ICC	switch to redundant ICU
no or anomalous TM data from HIFI	ESOC	Notify HIFI ICC	switch to redundant ICU
anomalous TM data from HIFI	???	Notify HIFI ICC	none
no HK from LCU	ESOC	Notify HIFI ICC	switch to redundant ICU
no HK or anomalies in HK from HRH	ESOC	Notify HIFI ICC	switch to redundant ICU
no HK or anomalies in HK from HRV	ESOC	Notify HIFI ICC	switch to redundant ICU
no HK or anomalies in HK from WEH	ESOC	Notify HIFI ICC	switch to redundant ICU
no HK or anomalies in HK from WEV	ESOC	Notify HIFI ICC	switch to redundant ICU
no HK/science data from HRH	ESOC	Notify HIFI ICC	switch to redundant ICU
no HK/science data from HRV	ESOC	Notify HIFI ICC	switch to redundant ICU
no HK/science data from WEH	ESOC	Notify HIFI ICC	switch to redundant ICU
no HK/science data from WEV	ESOC	Notify HIFI ICC	switch to redundant ICU
anomalous HK value	ESOC	Notify HIFI ICC	switch to redundant ICU
anomalous HK value	ESOC	Notify HIFI ICC	next read-out should be correct
anomalous bias setting	ICC		switch to redundant ICU
no HK from LSU	ESOC	Notify HIFI ICC	switch to redundant ICU
anomalous HK from LCU	ESOC	Notify HIFI ICC	switch to redundant ICU
no lock read-out	ESOC	Notify HIFI ICC	switch to redundant ICU
no power fault monitor	ESOC	Notify HIFI ICC	switch to redundant ICU
no frequency fault monitor	ESOC	Notify HIFI ICC	switch to redundant ICU
no temperature read-out	ESOC	Notify HIFI ICC	switch to redundant ICU
no science data	ICC		none
no temperature control during commissioning phase	ESOC	Notify HIFI ICC	switch to redundant ICU
no HK from WBS-h	ESOC	Notify HIFI ICC	switch to redundant

Symptom	Detected by	Contingency Procedure	Possible Recovery
			ICU
no HK from WBS-h		Notify HIFI ICC	none
no HK or anomalous HK from WBS-h	ESOC	Notify HIFI ICC	none
no HK from WBS-h	ESOC	Notify HIFI ICC	none
anomalous calibration data	ICC		none
anomalous temperature	ESOC	Notify HIFI ICC	none

13 INSTRUMENT BUDGETS

13.1 Power budget

The estimate for power load on the 28V main bus for the instrument is as the table below:
(Loads on the primary power bus for the different LCL's)

Unit code	Maximum Average Power.[3]) EOL (W)	Long Peak (W)	Short Peak (W)
FHICU main [1]) redundant	49.6	54.6 0	68.3 0
FHLCU main [2]) redundant	101	109 0	127 0
FHHRH	69.7	76	76
FHHRV	69.7	76	76
FHWEH	31.4	N.A.	32.8
FHWEV	31.4	N.A.	32.8
Total HIFI	**352.8**		

[1]) Including power for the FHFCU and FHIFH/V.
[2]) Including power for the FHLOU and FHLSU.
[3]) Maximum average of each line are not correlated. They are to be used for sizing the LCL, not for the power budget (use power dissipation for that).
Each unit with primary power requires separate LCL.

Table 13.1-1 Load on Main bus, Primary Mode and Standby Mode

13.2 Data budget

The HIFI data budgets are set in HIFI IID-B, sections 5.11.1 and 5.11.4.
HIFI's telemetry rate is tunable between 98 kbps and 140 kbps.

13.3 Mass budget

The mass below shows for each unit its nominal mass (i.e. current best estimate) and the allocated mass.

Project Code	Instrument Unit	#	Nominal Mass (kg)	Allocated Mass (kg)
FHFPU	Focal Plane Unit	1	48.1	50.0
FHFCU	Focal Plane Control Unit	1	8.9	10.0
FHIFH	IF up-converter horizontal	1	1.0	1.0

FHIFV	IF up-converter vertical	1	1.0	1.0
FHLOU	Local Oscillator Unit	1	42.0	43.6
FHLOR	LOU Radiator	1	6.9	7.0
FHLCU	Local Oscillator Control Unit	1	15.8	16.0
FHLSU	Local Oscillator Source Unit	1	19.0	20.0
FHHRH	HRS Horizontal Polarisation)[1]	1	12.5	13.0
FHHRV	HRS Vertical Polarisation)[1]	1	12.5	13.0
FHWEH	WBS Electronics Horizontal Polarisation)[1]	1	6.2	7.5
FHWEV	WBS Electronics Vertical Polarisation)[1]	1	6.2	7.5
FHWOH	WBS Optics Horizontal Polarisation)[1]	1	5.6	6.5
FHWOV	WBS Optics Vertical Polarisation)[1]	1	5.6	6.5
	WBS Internal Harness Horizontal Polarisation)[1]	1	0.5	0.7
	WBS Internal Harness Vertical Polarisation)[1]	1	0.5	0.8
FHICU	Instrument Control Unit	1	8.0	8.0
FHWIH	Warm Interconnect Harness	1	8.2	8.5
	Not Allocated			8.4
Total			208.5	229.0

)[1] Nominal mass is based on the measured QM values.

Table 13.3-1 Mass table

13.4 Error and alignment budget

13.5 Timing budget

14 SCIENCE DATA DEFINITION

The HIFI-science data is generated by four spectrometers, each of which has its own APID.

The science data of each spectrometer is organized in frames. A frame starts with a start-spectrometer-science packet and is followed by one or more data reports.

14.1 Science data transfer

1. The selected data of one of the Integration Buffers is packed in a Frame. The Structure-ID (SID) defines from which Integration Buffer and from which Spectrometer the data originates (The integration buffer is an array inside the ICU. Do not confuse with the accumulation buffer inside the spectrometers)
2. One frame consists of a Start Science Dataframe packet followed by NumberOfPacketsInFrame Science Data Report Packets.
3. The IntegrationSequenceNumber counts the number of times the Integration Buffer is packed and down-linked.
4. The IntegrationSequenceNumber starts at 0, at the beginning of each measurement
5. All packets of one frame have the same IntegrationSequenceNumber.
6. All Science Data Report Packets of one frame have the same SID.
7. Together with a Start Science Dataframe an IF power level packet is generated. This packet is specified in HIFI HK packet structure ICD.

Source	APID
HRS-H	1028
HRS-V	1029
WBS-H	1030
WBS-V	1031

Identifier	value
Type	21
Subtype	1

Table 14.1-1 ***Structure Identifiers for Science packets***

	Start frame	16 bits	24 bits	IF HK
HRS-H integration buffer #1	1	9	17	25
HRS-H integration buffer #2	2	10	18	26
HRS-V integration buffer #1	3	11	19	27
HRS-V integration buffer #2	4	12	20	28
WBS-H integration buffer #1	5	13	21	29
WBS-H integration buffer #2	6	14	22	30

WBS-V integration buffer #1	7	15	23	31
WBS-V integration buffer #2	8	16	24	32

14.1.1 Start HRS science dataframe

Start Byte	Length	Monitor Parameter	Value / remark
16	16	Structure ID	H: 1, 2 V: 3, 4
18	32	Observation ID	
22	32	Building block ID	
26	16	IntegrationSequenceNumber	
28	16	NumberOfPacketsInFrame	
30	48	Latched time	
36	16	HIF_N_HRS_INTEGR	
38	16	HIF_HRS_RSHIFT	
40	16	HIF_HRSH_SEL / HIF_HRSV_SEL	
42	24	HRS word #1 + n*258	n=0
45	24	HRS word #2 + n*258	n=0
48	24	HRS word #3 + n*258	n=0
42 + n*9	24	HRS word #1 + n*258	n=1-14
45 + n*9	24	HRS word #2 + n*258	n=1-14
48 + n*9	24	HRS word #3 + n*258	n=1-14
177	24	HRS word #1 + n*258	n=15
180	24	HRS word #2 + n*258	n=15
183	24	HRS word #3 + n*258	n=15

Notes: HIF_N_HRS_INTEGR is an echoed command parameter. This is the number of integrations in HRS-Integration buffer per packetization.

Table 14.1-2 HRS Science Data Frame

14.1.2 Start WBS science dataframe

Start byte	Length	Monitor Parameter	Value / remark
16	16	Structure ID	H: 5, 6 V: 7, 8
18	32	Observation ID	
22	32	Building block ID	
26	16	IntegrationSequenceNumber	
28	16	NumberOfPacketsInFrame	
30	48	Latched time	
36	16	HIF_N_WBS_INTEGR	
38	16	HIF_WBS_RSHIFT	
40	16	HIF_WBSH_OFFSET1 / HIF_WBSV_OFFSET1	
42	16	HIF_WBSH_WIDTH1 / HIF_WBSV_WIDTH1	
44	16	HIF_WBSH_OFFSET2 / HIF_WBSV_OFFSET2	
46	16	HIF_WBSH_WIDTH2 / HIF_WBSV_WIDTH2	
48	16	HIF_WBSH_OFFSET3 / HIF_WBSV_OFFSET3	
50	16	HIF_WBSH_WIDTH3 / HIF_WBSV_WIDTH3	
52	16	HIF_WBSH_OFFSET4 / HIF_WBSV_OFFSET4	
54	16	HIF_WBSH_WIDTH4 / HIF_WBSV_WIDTH4	
56	16	IntegratedScanCount WBS word 8192 (8193)	
58	24	WBS word 0 (1)	Dark Pixels CCD1
61	24	WBS word 1 (3)	
64	24	WBS word 2 (5)	
67	24	WBS word 3 (7)	
70	24	WBS word 2048 (2)	Dark Pixels CCD2
73	24	WBS word 2049 (4)	
76	24	WBS word 2050 (6)	
79	24	WBS word 2051 (8)	
82	24	WBS word 4096 (4097)	Dark Pixels CCD3
85	24	WBS word 4097 (4099)	
88	24	WBS word 4098 (4101)	
91	24	WBS word 4099 (4103)	
94	24	WBS word 6144 (4098)	Dark Pixels CCD4
97	24	WBS word 6145 (4100)	
100	24	WBS word 6146 (4102)	
103	24	WBS word 6147 (4104)	

Table 14.1-3 WBS Science Data Frame

Notes:

8. The Dark pixels are integrated as all other data words. The dark pixels will be packed always in 24 bits.

The OBS stores the WBS-datawords in a different order than they are transmitted by the WBS.
The WBS-coordinate of each dataword is as follows:
The datawords of CCD#1 are 1+2n, with n counts from 0 up to 2047
The datawords of CCD#2 are 2+2n, with n counts from 0 up to 2047
The datawords of CCD#3 are 4097+2n, with n counts from 0 up to 2047
The datawords of CCD#4 are 4098+2n, with n counts from 0 up to 2047

The OBS- coordinate of each dataword is as follows:
The datawords of CCD#1 are numbered from 0 up to 2047
The datawords of CCD#2 are numbered from 2048 up to 4095
The datawords of CCD#3 are numbered from 4096 up to 6143
The datawords of CCD#4 are numbered from 6144 up to 8191

9. The selected regions are expressed in OBS-coordinates.

The numbers of the dark-pixels are expressed in OBS-coordinates with WBS-coordinates in ellipses.

10. The darkpixels may appear in both the start-frame packet and in the data-report.
11. The order of the TM packets is: 1 start-frame, followed by CCD1, 2, 3, 4. The packets with the lowest coordinates are transmitted first.

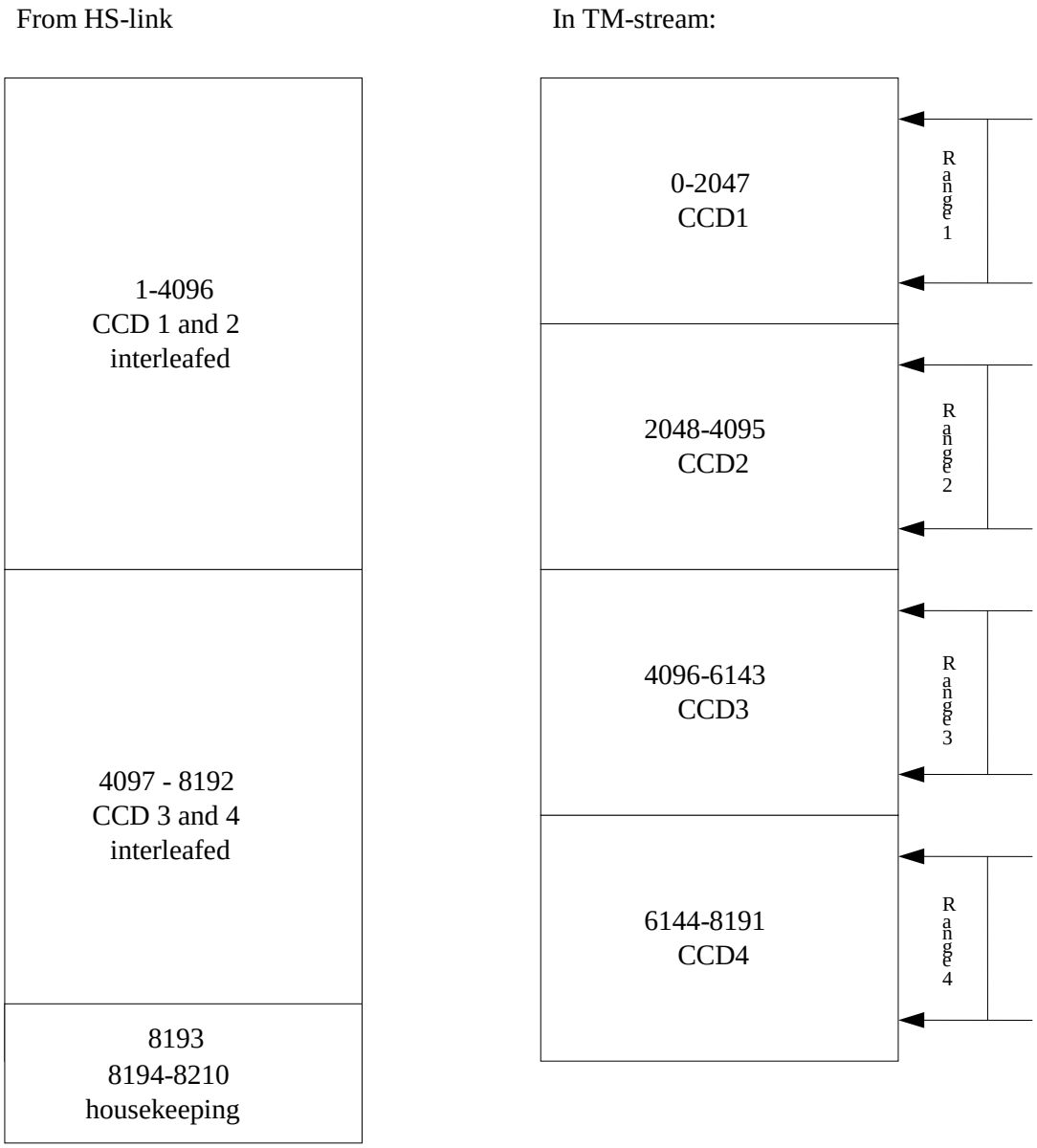

Figure 14.1-1 Word-numbering in WBS-HS stream and TM stream

14.1.3 Science data reports

The format of the science packets is identical for HRS and WBS data

14.1.3.1 Science packet 24 bits

Start Byte	Length	Monitor Parameter	Value / remark
16	16	Structure ID	17-24
18	32	Observation ID	
22	32	Building block ID	
26	16	Integration sequence number	
28	16	NumberOfPacketsInFrame	
30	16	PacketNumberInFrame	
32	16	FirstChannelNumber	
34	24	Data	Nch * 3 octets Nch is max 329
	24	Data	

14.1.3.2 Science packet 16 bits

Start Byte	Length	Monitor Parameter	Value / remark
16	16	Structure ID	9-16
18	32	Observation ID	
22	32	Building block ID	
26	16	Integration sequence number	
28	16	NumberOfPacketsInFrame	
30	16	PacketNumberInFrame	
32	16	FirstChannelNumber	
34	16	Data	Nch * 2 octets Nch is max 494
	16	Data	

Notes:
The PacketNumberInFrame starts counting at 0 and counts up to NumberOfPacketsInFrame-1.

For HRS:
The size of a HRS science packet is fixed: The words of one GaAs fit in one Science packet.

12. The FirstChannelNumber is the word-number of the first data-word in the packet minus 1.

Hence it assumes values n * 258 (n=0,15)

13. The first three words of each GaAs appear in both the start frame packet and the data reports.
14. The order in which the TM-packets appear in the stream is shown in Table 14.1-4:

Table 14.1-4 FirstChannelNumber for the 16 GaAs-packets

Packet	n
1. Start Frame	
2. Block 8 GaAs1	0
3. Block 8 GaAs2	258
4. Block 7 GaAs1	516
5. Block 7 GaAs2	774
6. Block 6 GaAs1	1032
7. Block 6 GaAs2	1290
8. Block 5 GaAs1	1548
9. Block 5 GaAs2	1806
10. Block 4 GaAs1	2064
11. Block 4 GaAs2	2322
12. Block 3 GaAs1	2580
13. Block 3 GaAs2	2838
14. Block 2 GaAs1	3096
15. Block 2 GaAs2	3354
16. Block 1 GaAs1	3612
17. Block 1 GaAs2	3870

For WBS:
The FirstChannelNumber is the OBS-coordinate of the first dataword in the packet.

15 ANNEX 1: MIB

HIFI_MIB_11_7.pdf

16 ANNEX 2: HIFI FLIGHT PROCEDURES

20080307-HIFI-procedures.zip

17 ANNEX 3: HIFI COMMISIONING PROCEDURES

HIFI-COP-MOIS_v0001.zip

18 ANNEX 4: DETAILS OF CONTINGENCY PROCEDURES

Symptoms	TM param	function_id	Function	Mode	Contingency Procedure	Possible Recovery
no HK from FCU	all parameters	FPU-1.1-1	Command from ICU	open, no signal or short circuit	Notify HIFI ICC	switch to red'nt ICU
no HK from FCU	all parameters	FPU-1.1-2	I/F circuit output	open, no signal or short circuit	Notify HIFI ICC	switch to red'nt ICU
HK value OOL	HF_APR_FT_15P_V	FPU-1.2-1	+15V supply	under or over votlage	Notify HIFI ICC	switch to red'nt ICU
HK value OOL	HF_APR_FT_15P_C	FPU-1.2-2	+15V supply	short circuit	Notify HIFI ICC	switch to red'nt ICU
HK value OOL	HF_APR_FT_15M_V	FPU-1.2-3	-15V supply	under or over votlage	Notify HIFI ICC	switch to red'nt ICU
HK value OOL	HF_APR_FT_15M_C	FPU-1.2-4	-15V supply	short circuit	Notify HIFI ICC	switch to red'nt ICU
HK value OOL	HF_APR_FT_5P_V	FPU-1.2-5	+5V supply	under or over voltage	Notify HIFI ICC	switch to red'nt ICU
HK value OOL	HF_APR_FT_5P_C	FPU-1.2-6	+5V supply	short circuit	Notify HIFI ICC	switch to red'nt ICU
HK value OOL	HF_APR_FT_18P_V	FPU-1.2-7	+18V supply	under or over voltage	Notify HIFI ICC	switch to red'nt ICU
HK value OOL	HF_APR_FT_18P_C	FPU-1.2-8	+18V supply	short circuit	Notify HIFI ICC	switch to red'nt ICU
HK value OOL	HF_APR_FT_18M_V	FPU-1.2-9	-18V supply	under or over voltage	Notify HIFI ICC	switch to red'nt ICU
HK value OOL	HF_APR_FT_18M_C	FPU-1.2-10	-18V supply	short circuit	Notify HIFI ICC	switch to red'nt ICU
HK value OOL	HF_APR_FT_8P_V	FPU-1.2-11	+8V supply	under or no voltage	Notify HIFI ICC	switch to red'nt ICU
HK value OOL	HF_APR_FT_8P_C	FPU-1.2-12	+8V supply	short circuit	Notify HIFI ICC	switch to red'nt ICU
HK value OOL	HF_AH1_CU_15P_V	FPU-1.3.1.1-1	+15V supply CU	under or over voltage	Notify HIFI ICC	To be specified
HK value OOL	HF_AH1_CU_15P_C	FPU-1.3.1.1-2	+15V supply CU	short circuit	Notify HIFI ICC	To be specified
HK value OOL	HF_AH1_CU_15M_V	FPU-1.3.1.1-3	-15V supply CU	under or over voltage	Notify HIFI ICC	To be specified
HK value OOL	HF_AH1_CU_15M_C	FPU-1.3.1.1-4	-15V supply CU	short circuit	Notify HIFI ICC	To be specified
HK value OOL	HF_AH1_CU_5P_V	FPU-1.3.1.1-5	+5V supply CU	under or over voltage	Notify HIFI ICC	To be specified
HK value OOL	HF_AH1_CU_5P_C	FPU-1.3.1.1-6	+5V supply CU	short circuit	Notify HIFI ICC	To be specified

Symptoms	TM param	function_id	Function	Mode	Contingency Procedure	Possible Recovery
HK value OOL	HF_AH1_CU_2P5_V	FPU-1.3.1.1-7	+2.5V supply CU	under or over voltage	Notify HIFI ICC	To be specified
HK value OOL	HF_AH1_CU_2P5_C	FPU-1.3.1.1-8	+2.5V supply CU	short circuit	Notify HIFI ICC	To be specified
HK value OOL	HF_AH1_FP_15P_V	FPU-1.3.1.1-9	+15V supply FP	under or over voltage	Notify HIFI ICC	To be specified
HK value OOL	HF_AH1_FP_15P_C	FPU-1.3.1.1-10	+15V supply FP	short circuit	Notify HIFI ICC	To be specified
HK value OOL	HF_AH1_FP_15M_V	FPU-1.3.1.1-11	-15V supply FP	under or over voltage	Notify HIFI ICC	To be specified
HK value OOL	HF_AH1_FP_15M_C	FPU-1.3.1.1-12	-15V supply FP	short circuit	Notify HIFI ICC	To be specified
HK value OOL	HF_AH1_FP_5P_V	FPU-1.3.1.1-13	+5V supply FP	under or over voltage	Notify HIFI ICC	To be specified
HK value OOL	HF_AH1_FP_5P_C	FPU-1.3.1.1-14	+5V supply FP	short circuit	Notify HIFI ICC	To be specified
anomalous HK value	AH1, DH1 parameters	FPU-1.3.1.1-15	Serial digital I/F	open, no signal or short circuit	Notify HIFI ICC	To be specified
anomalous HK value	AH1, DH1 parameters	FPU-1.3.1.1-16	Digital controller	internal error	Notify HIFI ICC	To be specified
anomalous HK value	AH1, DH1 parameters	FPU-1.3.1.1-17	Analog HK	no signal	Notify HIFI ICC	To be specified
anomalous HK value	HF_AH1_DPACT_V	FPU-1.3.1.1-18	Diplexer motor control	open, no voltage or short circuit	Notify HIFI ICC	To be specified
anomalous HK	HF_AH1_DPACT_C	FPU-1.3.1.1-	Diplexer motor	current too high	Notify HIFI ICC	To be specified

Symptoms	TM param	function_id	Function	Mode	Contingency Procedure	Possible Recovery
value		19	control			
anomalous HK value	HF_AH1_MXOUT-V	FPU-1.3.1.1-20	Mixer bias	open, no voltage or short circuit	Notify HIFI ICC	To be specified
anomalous HK value	HF_AH1_MXOUT-V	FPU-1.3.1.1-21	Mixer bias	voltage too high	Notify HIFI ICC	To be specified
anomalous HK value	HF_AH1_MXJNC-V	FPU-1.3.1.1-22	Mixer bias	open or no voltage	Notify HIFI ICC	To be specified
anomalous HK value	HF_AH1_MXJNC-V	FPU-1.3.1.1-23	Mixer bias	voltage too high	Notify HIFI ICC	To be specified
anomalous HK value	HF_AH1_MXJNC-C	FPU-1.3.1.1-24	Mixer bias	short circuit	Notify HIFI ICC	To be specified
anomalous HK value	HF_AH1_MXMG_V	FPU-1.3.1.1-25	Magnet control	open, no voltage or short circuit	Notify HIFI ICC	To be specified
anomalous HK value	HF_AH1_MXMG_C	FPU-1.3.1.1-26	Magnet control	current too high	Notify HIFI ICC	To be specified
anomalous HK value	HF_AH1_DHTR_V	FPU-1.3.1.1-27	Heater control	open, no voltage or short circuit	Notify HIFI ICC	To be specified
anomalous HK value	HF_AH1_DHTR_C	FPU-1.3.1.1-28	Heater control	current too high	Notify HIFI ICC	To be specified
anomalous HK value	HF_AH1_MXB_T	FPU-1.3.1.1-29	Temperature read-out	open, no signal or short circuit	Notify HIFI ICC	To be specified
HK value OOL	HF_AH2_CU_15P_V	FPU-1.3.1.2-1	+15V supply CU	under or over voltage	Notify HIFI ICC	To be specified

Symptoms	TM param	function_id	Function	Mode	Contingency Procedure	Possible Recovery
HK value OOL	HF_AH2_CU_15P_C	FPU-1.3.1.2-2	+15V supply CU	short circuit	Notify HIFI ICC	To be specified
HK value OOL	HF_AH2_CU_15M_V	FPU-1.3.1.2-3	-15V supply CU	under or over voltage	Notify HIFI ICC	To be specified
HK value OOL	HF_AH2_CU_15M_C	FPU-1.3.1.2-4	-15V supply CU	short circuit	Notify HIFI ICC	To be specified
HK value OOL	HF_AH2_CU_5P_V	FPU-1.3.1.2-5	+5V supply CU	under or over voltage	Notify HIFI ICC	To be specified
HK value OOL	HF_AH2_CU_5P_C	FPU-1.3.1.2-6	+5V supply CU	short circuit	Notify HIFI ICC	To be specified
HK value OOL	HF_AH2_CU_2P5_V	FPU-1.3.1.2-7	+2.5V supply CU	under or over voltage	Notify HIFI ICC	To be specified
HK value OOL	HF_AH2_CU_2P5_C	FPU-1.3.1.2-8	+2.5V supply CU	short circuit	Notify HIFI ICC	To be specified
HK value OOL	HF_AH2_FP_15P_V	FPU-1.3.1.2-9	+15V supply FP	under or over voltage	Notify HIFI ICC	To be specified
HK value OOL	HF_AH2_FP_15P_C	FPU-1.3.1.2-10	+15V supply FP	short circuit	Notify HIFI ICC	To be specified
HK value OOL	HF_AH2_FP_15M_V	FPU-1.3.1.2-11	-15V supply FP	under or over voltage	Notify HIFI ICC	To be specified
HK value OOL	HF_AH2_FP_15M_C	FPU-1.3.1.2-12	-15V supply FP	short circuit	Notify HIFI ICC	To be specified
HK value OOL	HF_AH2_FP_5P_V	FPU-1.3.1.2-13	+5V supply FP	under or over voltage	Notify HIFI ICC	To be specified
HK value OOL	HF_AH2_FP_5P_C	FPU-1.3.1.2-14	+5V supply FP	short circuit	Notify HIFI ICC	To be specified
anomalous HK value	AH2, DH2 parameters	FPU-1.3.1.2-15	Serial digital I/F	open, no signal or short circuit	Notify HIFI ICC	To be specified
anomalous HK value	AH2, DH2 parameters	FPU-1.3.1.2-16	Digital controller	internal error	Notify HIFI ICC	To be specified

Symptoms	TM param	function_id	Function	Mode	Contingency Procedure	Possible Recovery
anomalous HK value	AH2, DH2 parameters	FPU-1.3.1.2-17	Analog HK	no signal	Notify HIFI ICC	To be specified
anomalous HK value	HF_AH2_D_FIF1_V	FPU-1.3.1.2-18	First IF Ampl. drain 1 volt.	open, no voltage or voltage too high	Notify HIFI ICC	To be specified
anomalous HK value	HF_AH2_D_FIF1_C	FPU-1.3.1.2-19	First IF Ampl. drain 1 curr.	short circuit	Notify HIFI ICC	To be specified
anomalous HK value	HF_AH2_G_FIF1_V	FPU-1.3.1.2-20	First IF Ampl. gate 1 volt.	open, no voltage or voltage too high	Notify HIFI ICC	To be specified
anomalous HK value	HF_AH2_G_FIF1_C	FPU-1.3.1.2-21	First IF Ampl. gate 1curr.	short circuit	Notify HIFI ICC	To be specified
anomalous HK value	HF_AH2_D_FIF2_V	FPU-1.3.1.2-22	First IF Ampl. drain 2 volt.	open, no voltage or voltage too high	Notify HIFI ICC	To be specified
anomalous HK value	HF_AH2_D_FIF2_C	FPU-1.3.1.2-23	First IF Ampl. drain 2 curr.	short circuit	Notify HIFI ICC	To be specified
anomalous HK value	HF_AH2_G_FIF2_V	FPU-1.3.1.2-24	First IF Ampl. gate 2 volt.	open, no voltage or voltage too high	Notify HIFI ICC	To be specified
anomalous HK value	HF_AH2_G_FIF2_C	FPU-1.3.1.2-25	First IF Ampl. gate 2 curr.	short circuit	Notify HIFI ICC	To be specified
anomalous HK value	HF_AH2_D_SIF1_V	FPU-1.3.1.2-26	Sec. IF Ampl. drain 1 volt.	open, no voltage or voltage too high	Notify HIFI ICC	To be specified
anomalous HK value	HF_AH2_D_SIF1_C	FPU-1.3.1.2-27	Sec. IF Ampl. drain 1 curr.	short circuit	Notify HIFI ICC	To be specified
anomalous HK	HF_AH2_G_SIF1_V	FPU-1.3.1.2-	Sec. IF Ampl. gate 1	open, no voltage or voltage	Notify HIFI ICC	To be specified

Symptoms	TM param	function_id	Function	Mode	Contingency Procedure	Possible Recovery
value		28	volt.	too high		
anomalous HK value	HF_AH2_G_SIF1_C	FPU-1.3.1.2-29	Sec. IF Ampl. gate 1 curr.	short circuit	Notify HIFI ICC	To be specified
anomalous HK value	HF_AH2_D_SIF2_V	FPU-1.3.1.2-30	Sec. IF Ampl. drain 2 volt.	open, no voltage or voltage too high	Notify HIFI ICC	To be specified
anomalous HK value	HF_AH2_D_SIF2_C	FPU-1.3.1.2-31	Sec. IF Ampl. drain 2 curr.	short circuit	Notify HIFI ICC	To be specified
anomalous HK value	HF_AH2_G_SIF2_V	FPU-1.3.1.2-32	Sec. IF Ampl. gate 2 volt.	open, no voltage or voltage too high	Notify HIFI ICC	To be specified
anomalous HK value	HF_AH2_G_SIF2_C	FPU-1.3.1.2-33	Sec. IF Ampl. gate 2 curr.	short circuit	Notify HIFI ICC	To be specified
anomalous HK value	HF_AH2_D_SIF3_V	FPU-1.3.1.2-34	Sec. IF Ampl. drain 3 volt.	open, no voltage or voltage too high	Notify HIFI ICC	To be specified
anomalous HK value	HF_AH2_D_SIF3_C	FPU-1.3.1.2-35	Sec. IF Ampl. drain 3 curr.	short circuit	Notify HIFI ICC	To be specified
anomalous HK value	HF_AH2_G_SIF3_V	FPU-1.3.1.2-36	Sec. IF Ampl. gate 3 volt.	open, no voltage or voltage too high	Notify HIFI ICC	To be specified
anomalous HK value	HF_AH2_G_SIF3_C	FPU-1.3.1.2-37	Sec. IF Ampl. gate 3 curr.	short circuit	Notify HIFI ICC	To be specified
HK value OOL	HF_AV1_CU_15P_V	FPU-1.3.2.1-1	+15V supply CU	under or over voltage	Notify HIFI ICC	To be specified
HK value OOL	HF_AV1_CU_15P_C	FPU-1.3.2.1-2	+15V supply CU	short circuit	Notify HIFI ICC	To be specified
HK value OOL	HF_AV1_CU_15M_V	FPU-1.3.2.1-3	-15V supply CU	under or over voltage	Notify HIFI ICC	To be specified

Symptoms	TM param	function_id	Function	Mode	Contingency Procedure	Possible Recovery
HK value OOL	HF_AV1_CU_15M_C	FPU-1.3.2.1-4	-15V supply CU	short circuit	Notify HIFI ICC	To be specified
HK value OOL	HF_AV1_CU_5P_V	FPU-1.3.2.1-5	+5V supply CU	under or over voltage	Notify HIFI ICC	To be specified
HK value OOL	HF_AV1_CU_5P_C	FPU-1.3.2.1-6	+5V supply CU	short circuit	Notify HIFI ICC	To be specified
HK value OOL	HF_AV1_CU_2P5_V	FPU-1.3.2.1-7	+2.5V supply CU	under or over voltage	Notify HIFI ICC	To be specified
HK value OOL	HF_AV1_CU_2P5_C	FPU-1.3.2.1-8	+2.5V supply CU	short circuit	Notify HIFI ICC	To be specified
HK value OOL	HF_AV1_FP_15P_V	FPU-1.3.2.1-9	+15V supply FP	under or over voltage	Notify HIFI ICC	To be specified
HK value OOL	HF_AV1_FP_15P_C	FPU-1.3.2.1-10	+15V supply FP	short circuit	Notify HIFI ICC	To be specified
HK value OOL	HF_AV1_FP_15M_V	FPU-1.3.2.1-11	-15V supply FP	under or over voltage	Notify HIFI ICC	To be specified
HK value OOL	HF_AV1_FP_15M_C	FPU-1.3.2.1-12	-15V supply FP	short circuit	Notify HIFI ICC	To be specified
HK value OOL	HF_AV1_FP_5P_V	FPU-1.3.2.1-13	+5V supply FP	under or over voltage	Notify HIFI ICC	To be specified
HK value OOL	HF_AV1_FP_5P_C	FPU-1.3.2.1-14	+5V supply FP	short circuit	Notify HIFI ICC	To be specified
anomalous HK value	AV1, DV1 parameters	FPU-1.3.2.1-15	Serial digital I/F	open, no signal or short circuit	Notify HIFI ICC	To be specified
anomalous HK value	AV1, DV1 parameters	FPU-1.3.2.1-16	Digital controller	internal error	Notify HIFI ICC	To be specified
anomalous HK value	AV1, DV1 parameters	FPU-1.3.2.1-17	Analog HK	no signal	Notify HIFI ICC	To be specified

Symptoms	TM param	function_id	Function	Mode	Contingency Procedure	Possible Recovery
anomalous HK value	HF_AV1_DPACT_V	FPU-1.3.2.1-18	Diplexer motor control	open, no voltage or short circuit	Notify HIFI ICC	To be specified
anomalous HK value	HF_AV1_DPACT_C	FPU-1.3.2.1-19	Diplexer motor control	current too high	Notify HIFI ICC	To be specified
anomalous HK value	HF_AV1_MXOUT-V	FPU-1.3.2.1-20	Mixer bias	open, no voltage or short circuit	Notify HIFI ICC	To be specified
anomalous HK value	HF_AV1_MXOUT-V	FPU-1.3.2.1-21	Mixer bias	voltage too high	Notify HIFI ICC	To be specified
anomalous HK value	HF_AV1_MXJNC-V	FPU-1.3.2.1-22	Mixer bias	open or no voltage	Notify HIFI ICC	To be specified
anomalous HK value	HF_AV1_MXJNC-V	FPU-1.3.2.1-23	Mixer bias	voltage too high	Notify HIFI ICC	To be specified
anomalous HK value	HF_AV1_MXJNC-C	FPU-1.3.2.1-24	Mixer bias	short circuit	Notify HIFI ICC	To be specified
anomalous HK value	HF_AV1_MXMG_V	FPU-1.3.2.1-25	Magnet control	open, no voltage or short circuit	Notify HIFI ICC	To be specified
anomalous HK value	HF_AV1_MXMG_C	FPU-1.3.2.1-26	Magnet control	current too high	Notify HIFI ICC	To be specified
anomalous HK value	HF_AV1_DHTR_V	FPU-1.3.2.1-27	Heater control	open, no voltage or short circuit	Notify HIFI ICC	To be specified
anomalous HK value	HF_AV1_DHTR_C	FPU-1.3.2.1-28	Heater control	current too high	Notify HIFI ICC	To be specified
anomalous HK	HF_AV1_MXB_T	FPU-1.3.2.1-	Temperature read-	open, no signal or short circuit	Notify HIFI ICC	To be specified

Symptoms	TM param	function_id	Function	Mode	Contingency Procedure	Possible Recovery
value		29	out			
HK value OOL	HF_AV2_CU_15P_V	FPU-1.3.2.2-1	+15V supply CU	under or over voltage	Notify HIFI ICC	To be specified
HK value OOL	HF_AV2_CU_15P_C	FPU-1.3.2.2-2	+15V supply CU	short circuit	Notify HIFI ICC	To be specified
HK value OOL	HF_AV2_CU_15M_V	FPU-1.3.2.2-3	-15V supply CU	under or over voltage	Notify HIFI ICC	To be specified
HK value OOL	HF_AV2_CU_15M_C	FPU-1.3.2.2-4	-15V supply CU	short circuit	Notify HIFI ICC	To be specified
HK value OOL	HF_AV2_CU_5P_V	FPU-1.3.2.2-5	+5V supply CU	under or over voltage	Notify HIFI ICC	To be specified
HK value OOL	HF_AV2_CU_5P_C	FPU-1.3.2.2-6	+5V supply CU	short circuit	Notify HIFI ICC	To be specified
HK value OOL	HF_AV2_CU_2P5_V	FPU-1.3.2.2-7	+2.5V supply CU	under or over voltage	Notify HIFI ICC	To be specified
HK value OOL	HF_AV2_CU_2P5_C	FPU-1.3.2.2-8	+2.5V supply CU	short circuit	Notify HIFI ICC	To be specified
HK value OOL	HF_AV2_FP_15P_V	FPU-1.3.2.2-9	+15V supply FP	under or over voltage	Notify HIFI ICC	To be specified
HK value OOL	HF_AV2_FP_15P_C	FPU-1.3.2.2-10	+15V supply FP	short circuit	Notify HIFI ICC	To be specified
HK value OOL	HF_AV2_FP_15M_V	FPU-1.3.2.2-11	-15V supply FP	under or over voltage	Notify HIFI ICC	To be specified
HK value OOL	HF_AV2_FP_15M_C	FPU-1.3.2.2-12	-15V supply FP	short circuit	Notify HIFI ICC	To be specified
HK value OOL	HF_AV2_FP_5P_V	FPU-1.3.2.2-13	+5V supply FP	under or over voltage	Notify HIFI ICC	To be specified
HK value OOL	HF_AV2_FP_5P_C	FPU-1.3.2.2-14	+5V supply FP	short circuit	Notify HIFI ICC	To be specified
anomalous HK value	AV2, DV2 parameters	FPU-1.3.2.2-15	Serial digital I/F	open, no signal or short circuit	Notify HIFI ICC	To be specified

Symptoms	TM param	function_id	Function	Mode	Contingency Procedure	Possible Recovery
anomalous HK value	AV2, DV2 parameters	FPU-1.3.2.2-16	Digital controller	internal error	Notify HIFI ICC	To be specified
anomalous HK value	AV2, DV2 parameters	FPU-1.3.2.2-17	Analog HK	no signal	Notify HIFI ICC	To be specified
anomalous HK value	HF_AV2_D_FIF1_V	FPU-1.3.2.2-18	First IF Ampl. drain 1 volt.	open, no voltage or voltage too high	Notify HIFI ICC	To be specified
anomalous HK value	HF_AV2_D_FIF1_C	FPU-1.3.2.2-19	First IF Ampl. drain 1 curr.	short circuit	Notify HIFI ICC	To be specified
anomalous HK value	HF_AV2_G_FIF1_V	FPU-1.3.2.2-20	First IF Ampl. gate 1 volt.	open, no voltage or voltage too high	Notify HIFI ICC	To be specified
anomalous HK value	HF_AV2_G_FIF1_C	FPU-1.3.2.2-21	First IF Ampl. gate 1curr.	short circuit	Notify HIFI ICC	To be specified
anomalous HK value	HF_AV2_D_FIF2_V	FPU-1.3.2.2-22	First IF Ampl. drain 2 volt.	open, no voltage or voltage too high	Notify HIFI ICC	To be specified
anomalous HK value	HF_AV2_D_FIF2_C	FPU-1.3.2.2-23	First IF Ampl. drain 2 curr.	short circuit	Notify HIFI ICC	To be specified
anomalous HK value	HF_AV2_G_FIF2_V	FPU-1.3.2.2-24	First IF Ampl. gate 2 volt.	open, no voltage or voltage too high	Notify HIFI ICC	To be specified
anomalous HK value	HF_AV2_G_FIF2_C	FPU-1.3.2.2-25	First IF Ampl. gate 2 curr.	short circuit	Notify HIFI ICC	To be specified
anomalous HK value	HF_AV2_D_SIF1_V	FPU-1.3.2.2-26	Sec. IF Ampl. drain 1 volt.	open, no voltage or voltage too high	Notify HIFI ICC	To be specified
anomalous HK	HF_AV2_D_SIF1_C	FPU-1.3.2.2-	Sec. IF Ampl. drain	short circuit	Notify HIFI ICC	To be specified

Symptoms	TM param	function_id	Function	Mode	Contingency Procedure	Possible Recovery
value		27	1 curr.			
anomalous HK value	HF_AV2_G_SIF1_V	FPU-1.3.2.2-28	Sec. IF Ampl. gate 1 volt.	open, no voltage or voltage too high	Notify HIFI ICC	To be specified
anomalous HK value	HF_AV2_G_SIF1_C	FPU-1.3.2.2-29	Sec. IF Ampl. gate 1 curr.	short circuit	Notify HIFI ICC	To be specified
anomalous HK value	HF_AV2_D_SIF2_V	FPU-1.3.2.2-30	Sec. IF Ampl. drain 2 volt.	open, no voltage or voltage too high	Notify HIFI ICC	To be specified
anomalous HK value	HF_AV2_D_SIF2_C	FPU-1.3.2.2-31	Sec. IF Ampl. drain 2 curr.	short circuit	Notify HIFI ICC	To be specified
anomalous HK value	HF_AV2_G_SIF2_V	FPU-1.3.2.2-32	Sec. IF Ampl. gate 2 volt.	open, no voltage or voltage too high	Notify HIFI ICC	To be specified
anomalous HK value	HF_AV2_G_SIF2_C	FPU-1.3.2.2-33	Sec. IF Ampl. gate 2 curr.	short circuit	Notify HIFI ICC	To be specified
anomalous HK value	HF_AV2_D_SIF3_V	FPU-1.3.2.2-34	Sec. IF Ampl. drain 3 volt.	open, no voltage or voltage too high	Notify HIFI ICC	To be specified
anomalous HK value	HF_AV2_D_SIF3_C	FPU-1.3.2.2-35	Sec. IF Ampl. drain 3 curr.	short circuit	Notify HIFI ICC	To be specified
anomalous HK value	HF_AV2_G_SIF3_V	FPU-1.3.2.2-36	Sec. IF Ampl. gate 3 volt.	open, no voltage or voltage too high	Notify HIFI ICC	To be specified
anomalous HK value	HF_AV2_G_SIF3_C	FPU-1.3.2.2-37	Sec. IF Ampl. gate 3 curr.	short circuit	Notify HIFI ICC	To be specified
HK value OOL	HF_APR_CU_15P_V	FPU-1.4-1	+15V supply CU	under or over voltage	Notify HIFI ICC	switch to red’nt ICU

Symptoms	TM param	function_id	Function	Mode	Contingency Procedure	Possible Recovery
HK value OOL	HF_APR_WU_15P_C	FPU-1.4-2	+15V supply CU warm	short circuit	Notify HIFI ICC	switch to red'nt ICU
HK value OOL	HF_APR_CU_15P_C	FPU-1.4-3	+15V supply CU cold	short circuit	Notify HIFI ICC	switch to red'nt ICU
HK value OOL	HF_APR_CU_15M_V	FPU-1.4-4	-15V supply CU	under or over voltage	Notify HIFI ICC	switch to red'nt ICU
HK value OOL	HF_APR_WU_15M_C	FPU-1.4-5	-15V supply CU warm	short circuit	Notify HIFI ICC	switch to red'nt ICU
HK value OOL	HF_APR_CU_15M_C	FPU-1.4-6	-15V supply CU cold	short circuit	Notify HIFI ICC	switch to red'nt ICU
HK value OOL	HF_APR_CU_5P_V	FPU-1.4-7	+5V supply CU	under or over voltage	Notify HIFI ICC	switch to red'nt ICU
HK value OOL	HF_APR_WU_5P_C	FPU-1.4-8	+5V supply CU warm	short circuit	Notify HIFI ICC	switch to red'nt ICU
HK value OOL	HF_APR_CU_5P_C	FPU-1.4-9	+5V supply CU cold	short circuit	Notify HIFI ICC	switch to red'nt ICU
HK value OOL	HF_APR_CU_2P5_V	FPU-1.4-10	+2.5V supply CU	under or over voltage	Notify HIFI ICC	switch to red'nt ICU
HK value OOL	HF_APR_WU_2P5_C	FPU-1.4-11	+2.5V supply CU warm	short circuit	Notify HIFI ICC	switch to red'nt ICU
HK value OOL	HF_APR_CU_2P5_C	FPU-1.4-12	+2.5V supply CU cold	short circuit	Notify HIFI ICC	switch to red'nt ICU
anomalous HK value	APR, DPR parameters	FPU-1.4-13	Serial digital I/F	open, no signal or short circuit	Notify HIFI ICC	switch to red'nt ICU
anomalous HK value	APR, DPR parameters	FPU-1.4-14	Digital controller	internal error	Notify HIFI ICC	switch to red'nt ICU

Symptoms	TM param	function_id	Function	Mode	Contingency Procedure	Possible Recovery
anomalous HK value	APR, DPR parameters	FPU-1.4-15	Analog HK	open, no signal or short circuit	Notify HIFI ICC	switch to red'nt ICU
anomalous HK value	HF_APR_UCONH_V	FPU-1.4-16	Up converter horizontal	unable to switch on	Notify HIFI ICC	switch to red'nt ICU
anomalous HK value	HF_APR_UCONH_V	FPU-1.4-17	Up converter horizontal	unable to switch off	Notify HIFI ICC	switch to red'nt ICU
anomalous HK value	HF_APR_UCONH_V	FPU-1.4-18	Up converter horizontal supply	open circuit or no voltage	Notify HIFI ICC	switch to red'nt ICU
anomalous HK value	HF_APR_UCONH_C	FPU-1.4-19	Up converter horizontal supply	short circuit	Notify HIFI ICC	switch to red'nt ICU
HK value OOL	HF_APR_UCONH_T	FPU-1.4-20	Up converter hor. temperature	open, no signal or short circuit	Notify HIFI ICC	switch to red'nt ICU
anomalous HK value	HF_APR_UCONV_V	FPU-1.4-21	Up converter vertical	unable to switch on	Notify HIFI ICC	switch to red'nt ICU
anomalous HK value	HF_APR_UCONV_V	FPU-1.4-22	Up converter vertical	unable to switch off	Notify HIFI ICC	switch to red'nt ICU
anomalous HK value	HF_APR_UCONV_V	FPU-1.4-23	Up converter vertical supply	open circuit or no voltage	Notify HIFI ICC	switch to red'nt ICU
anomalous HK value	HF_APR_UCONV_C	FPU-1.4-24	Up converter vertical supply	short circuit	Notify HIFI ICC	switch to red'nt ICU
HK value OOL	HF_APR_UCONV_T	FPU-1.4-25	Up converter vert. temperature	open, no signal or short circuit	Notify HIFI ICC	switch to red'nt ICU
anomalous HK	HF_APR_CHA_P_V	FPU-1.4-26	Chopper actuator	under or over voltage	Notify HIFI ICC	To be specified

Symptoms	TM param	function_id	Function	Mode	Contingency Procedure	Possible Recovery
value			main			
anomalous HK value	HF_APR_CHA_P_C	FPU-1.4-27	Chopper actuator main	short circuit	Notify HIFI ICC	To be specified
anomalous HK value	HF_APR_CHA_R_V	FPU-1.4-28	Chopper actuator red.	under or over voltage	Notify HIFI ICC	To be specified
anomalous HK value	HF_APR_CHA_R_C	FPU-1.4-29	Chopper actuator red.	short circuit	Notify HIFI ICC	To be specified
anomalous HK value	HF_APR_CH_ROT	FPU-1.4-30	Chopper LVDT read-out	open, no signal or short circuit	Notify HIFI ICC	switch to red'nt ICU
HK value OOL	HF_APR_CS_V	FPU-1.4-31	Calibrator supply	under or over voltage	Notify HIFI ICC	switch to red'nt ICU
HK value OOL	HF_APR_CS_C	FPU-1.4-32	Calibrator supply	open or short circuit	Notify HIFI ICC	switch to red'nt ICU
HK value OOL	HF_APR_SCCS_CT	FPU-1.4-33	Temperature cold source	open, no signal or short circuit	Notify HIFI ICC	switch to red'nt ICU
HK value OOL	HF_APR_SCHS_CT	FPU-1.4-34	Temperature hot source	open, no signal or short circuit	Notify HIFI ICC	switch to red'nt ICU
HK value OOL	HF_APR_S2K_CT	FPU-1.4-35	Temperature 2K strap	open, no signal or short circuit	Notify HIFI ICC	switch to red'nt ICU
HK value OOL	HF_APR_S4K_CT	FPU-1.4-36	Temperature 4K strap	open, no signal or short circuit	Notify HIFI ICC	switch to red'nt ICU
HK value OOL	HF_APR_S10K_CT	FPU-1.4-37	Temperature 10K	open, no signal or short circuit	Notify HIFI ICC	To be specified
anomalous HK value	HF_AH1_MXJNC-V	FPU-1.5.1-1	Mixer bias	open or short circuit	Notify HIFI ICC	To be specified

Symptoms	TM param	function_id	Function	Mode	Contingency Procedure	Possible Recovery
anomalous HK value	HF_AH1_MXJNC-V	FPU-1.5.1-2	Mixer bias	short to +5V	Notify HIFI ICC	To be specified
anomalous HK value	HF_AH1_MXMG_V	FPU-1.5.1-3	Magnet current	open or short circuit	Notify HIFI ICC	To be specified
anomalous HK value	HF_AH1_MXMG_V	FPU-1.5.1-4	Magnet current	short to +5V	Notify HIFI ICC	To be specified
anomalous HK value	HF_AH1_DHTR_V	FPU-1.5.1-5	Heater current	open or short circuit	Notify HIFI ICC	To be specified
anomalous HK value	HF_AH1_DHTR_V	FPU-1.5.1-6	Heater current	short to +5V	Notify HIFI ICC	To be specified
anomalous HK value	HF_AH1_DPACT_C	FPU-1.5.1-7	Diplexer motor supply	open or short circuit	Notify HIFI ICC	To be specified
anomalous HK value	HF_AH1_DPACT_C	FPU-1.5.1-8	Diplexer motor supply	short to +5V	Notify HIFI ICC	To be specified
anomalous HK value	HF_AH1_MXB_T	FPU-1.5.1-9	Temperature read-out	open or short circuit	Notify HIFI ICC	To be specified
anomalous HK value	HF_AH1_MXB_T	FPU-1.5.1-10	Temperature read-out	short to +5V	Notify HIFI ICC	To be specified
anomalous HK value	HF_AH2_D_FIF1_V	FPU-1.5.1-11	First IF Ampl. drain 1 volt.	open or short circuit	Notify HIFI ICC	To be specified
anomalous HK value	HF_AH2_D_FIF1_V	FPU-1.5.1-12	First IF Ampl. drain 1 curr.	short to +5V	Notify HIFI ICC	To be specified
anomalous HK	HF_AH2_G_FIF1_V	FPU-1.5.1-13	First IF Ampl. gate 1	open or short circuit	Notify HIFI ICC	To be specified

Symptoms	TM param	function_id	Function	Mode	Contingency Procedure	Possible Recovery
value			volt.			
anomalous HK value	HF_AH2_G_FIF1_V	FPU-1.5.1-14	First IF Ampl. gate 1curr.	short to +5V	Notify HIFI ICC	To be specified
anomalous HK value	HF_AH2_D_FIF2_V	FPU-1.5.1-15	First IF Ampl. drain 2 volt.	open or short circuit	Notify HIFI ICC	To be specified
anomalous HK value	HF_AH2_D_FIF2_V	FPU-1.5.1-16	First IF Ampl. drain 2 curr.	short to +5V	Notify HIFI ICC	To be specified
anomalous HK value	HF_AH2_G_FIF2_V	FPU-1.5.1-17	First IF Ampl. gate 2 volt.	open or short circuit	Notify HIFI ICC	To be specified
anomalous HK value	HF_AH2_G_FIF2_V	FPU-1.5.1-18	First IF Ampl. gate 2 curr.	short to +5V	Notify HIFI ICC	To be specified
anomalous HK value	HF_AH2_D_SIF1_V	FPU-1.5.1-19	Sec. IF Ampl. drain 1 volt.	open or short circuit	Notify HIFI ICC	To be specified
anomalous HK value	HF_AH2_D_SIF1_V	FPU-1.5.1-20	Sec. IF Ampl. drain 1 curr.	short to +5V	Notify HIFI ICC	To be specified
anomalous HK value	HF_AH2_G_SIF1_V	FPU-1.5.1-21	Sec. IF Ampl. gate 1 volt.	open or short circuit	Notify HIFI ICC	To be specified
anomalous HK value	HF_AH2_G_SIF1_V	FPU-1.5.1-22	Sec. IF Ampl. gate 1 curr.	short to +5V	Notify HIFI ICC	To be specified
anomalous HK value	HF_AH2_D_SIF2_V	FPU-1.5.1-23	Sec. IF Ampl. drain 2 volt.	open or short circuit	Notify HIFI ICC	To be specified
anomalous HK value	HF_AH2_D_SIF2_V	FPU-1.5.1-24	Sec. IF Ampl. drain 2 curr.	short to +5V	Notify HIFI ICC	To be specified

Symptoms	TM param	function_id	Function	Mode	Contingency Procedure	Possible Recovery
anomalous HK value	HF_AH2_G_SIF2_V	FPU-1.5.1-25	Sec. IF Ampl. gate 2 volt.	open or short circuit	Notify HIFI ICC	To be specified
anomalous HK value	HF_AH2_G_SIF2_V	FPU-1.5.1-26	Sec. IF Ampl. gate 2 curr.	short to +5V	Notify HIFI ICC	To be specified
anomalous HK value	HF_AH2_D_SIF3_V	FPU-1.5.1-27	Sec. IF Ampl. drain 3 volt.	open or short circuit	Notify HIFI ICC	To be specified
anomalous HK value	HF_AH2_D_SIF3_V	FPU-1.5.1-28	Sec. IF Ampl. drain 3 curr.	short to +5V	Notify HIFI ICC	To be specified
anomalous HK value	HF_AH2_G_SIF3_V	FPU-1.5.1-29	Sec. IF Ampl. gate 3 volt.	open or short circuit	Notify HIFI ICC	To be specified
anomalous HK value	HF_AH2_G_SIF3_V	FPU-1.5.1-30	Sec. IF Ampl. gate 3 curr.	short to +5V	Notify HIFI ICC	To be specified
anomalous HK value	HF_AV1_MXJNC-V	FPU-1.5.2-1	Mixer bias	open or short circuit	Notify HIFI ICC	To be specified
anomalous HK value	HF_AV1_MXJNC-V	FPU-1.5.2-2	Mixer bias	short to +5V	Notify HIFI ICC	To be specified
anomalous HK value	HF_AV1_MXMG_V	FPU-1.5.2-3	Magnet current	open or short circuit	Notify HIFI ICC	To be specified
anomalous HK value	HF_AV1_MXMG_V	FPU-1.5.2-4	Magnet current	short to +5V	Notify HIFI ICC	To be specified
anomalous HK value	HF_AV1_DHTR_V	FPU-1.5.2-5	Heater current	open or short circuit	Notify HIFI ICC	To be specified
anomalous HK	HF_AV1_DHTR_V	FPU-1.5.2-6	Heater current	short to +5V	Notify HIFI ICC	To be specified

Symptoms	TM param	function_id	Function	Mode	Contingency Procedure	Possible Recovery
value						
anomalous HK value	HF_AV1_DPACT_C	FPU-1.5.2-7	Diplexer motor supply	open or short circuit	Notify HIFI ICC	To be specified
anomalous HK value	HF_AV1_DPACT_C	FPU-1.5.2-8	Diplexer motor supply	short to +5V	Notify HIFI ICC	To be specified
anomalous HK value	HF_AV1_MXB_T	FPU-1.5.2-9	Temperature read-out	open or short circuit	Notify HIFI ICC	To be specified
anomalous HK value	HF_AV1_MXB_T	FPU-1.5.2-10	Temperature read-out	short to +5V	Notify HIFI ICC	To be specified
anomalous HK value	HF_AV2_D_FIF1_V	FPU-1.5.2-11	First IF Ampl. drain 1 volt.	open or short circuit	Notify HIFI ICC	To be specified
anomalous HK value	HF_AV2_D_FIF1_V	FPU-1.5.2-12	First IF Ampl. drain 1 curr.	short to +5V	Notify HIFI ICC	To be specified
anomalous HK value	HF_AV2_G_FIF1_V	FPU-1.5.2-13	First IF Ampl. gate 1 volt.	open or short circuit	Notify HIFI ICC	To be specified
anomalous HK value	HF_AV2_G_FIF1_V	FPU-1.5.2-14	First IF Ampl. gate 1curr.	short to +5V	Notify HIFI ICC	To be specified
anomalous HK value	HF_AV2_D_FIF2_V	FPU-1.5.2-15	First IF Ampl. drain 2 volt.	open or short circuit	Notify HIFI ICC	To be specified
anomalous HK value	HF_AV2_D_FIF2_V	FPU-1.5.2-16	First IF Ampl. drain 2 curr.	short to +5V	Notify HIFI ICC	To be specified
anomalous HK value	HF_AV2_G_FIF2_V	FPU-1.5.2-17	First IF Ampl. gate 2 volt.	open or short circuit	Notify HIFI ICC	To be specified

Symptoms	TM param	function_id	Function	Mode	Contingency Procedure	Possible Recovery
anomalous HK value	HF_AV2_G_FIF2_V	FPU-1.5.2-18	First IF Ampl. gate 2 curr.	short to +5V	Notify HIFI ICC	To be specified
anomalous HK value	HF_AV2_D_SIF1_V	FPU-1.5.2-19	Sec. IF Ampl. drain 1 volt.	open or short circuit	Notify HIFI ICC	To be specified
anomalous HK value	HF_AV2_D_SIF1_V	FPU-1.5.2-20	Sec. IF Ampl. drain 1 curr.	short to +5V	Notify HIFI ICC	To be specified
anomalous HK value	HF_AV2_G_SIF1_V	FPU-1.5.2-21	Sec. IF Ampl. gate 1 volt.	open or short circuit	Notify HIFI ICC	To be specified
anomalous HK value	HF_AV2_G_SIF1_V	FPU-1.5.2-22	Sec. IF Ampl. gate 1 curr.	short to +5V	Notify HIFI ICC	To be specified
anomalous HK value	HF_AV2_D_SIF2_V	FPU-1.5.2-23	Sec. IF Ampl. drain 2 volt.	open or short circuit	Notify HIFI ICC	To be specified
anomalous HK value	HF_AV2_D_SIF2_V	FPU-1.5.2-24	Sec. IF Ampl. drain 2 curr.	short to +5V	Notify HIFI ICC	To be specified
anomalous HK value	HF_AV2_G_SIF2_V	FPU-1.5.2-25	Sec. IF Ampl. gate 2 volt.	open or short circuit	Notify HIFI ICC	To be specified
anomalous HK value	HF_AV2_G_SIF2_V	FPU-1.5.2-26	Sec. IF Ampl. gate 2 curr.	short to +5V	Notify HIFI ICC	To be specified
anomalous HK value	HF_AV2_D_SIF3_V	FPU-1.5.2-27	Sec. IF Ampl. drain 3 volt.	open or short circuit	Notify HIFI ICC	To be specified
anomalous HK value	HF_AV2_D_SIF3_V	FPU-1.5.2-28	Sec. IF Ampl. drain 3 curr.	short to +5V	Notify HIFI ICC	To be specified
anomalous HK	HF_AV2_G_SIF3_V	FPU-1.5.2-29	Sec. IF Ampl. gate 3	open or short circuit	Notify HIFI ICC	To be specified

Symptoms	TM param	function_id	Function	Mode	Contingency Procedure	Possible Recovery
value			volt.			
anomalous HK value	HF_AV2_G_SIF3_V	FPU-1.5.2-30	Sec. IF Ampl. gate 3 curr.	short to +5V	Notify HIFI ICC	To be specified
no HK from FCU	all HK parameters	FPU-1.6-1	Housekeeping to ICU	open, no signal or short circuit	Notify HIFI ICC	switch to red'nt ICU
loss of image quality	none	FPU-2.1-1	Mirrors M3 and M4	contamination or misalignment	Notify HIFI ICC	To be specified
loss of image quality	none	FPU-2.2-1	Mirrors M5 to M7	contamination or misalignment	Notify HIFI ICC	To be specified
anomalous HK value	HF_APR_CH_ROT	FPU-2.2-2	Activator	activator failure	Notify HIFI ICC	switch to red'nt ICU
anomalous HK value	HF_APR_CH_ROT	FPU-2.2-3	Flexural pivot	broken pivot	Notify HIFI ICC	To be specified
anomalous HK value	HF_APR_CH_ROT	FPU-2.2-4	Position sensor I/F	open, no signal or short circuit	Notify HIFI ICC	switch to red'nt ICU
loss of image quality	none	FPU-2.3-1	Mirror M8	contamination or misalignment	Notify HIFI ICC	To be specified
HK value OOL	HF_APR_CS_V	FPU-2.4-1	Heater	open circuit	Notify HIFI ICC	switch to red'nt ICU
HK value OOL	HF_APR_CS_C	FPU-2.4-2	Heater	short circuit	Notify HIFI ICC	switch to red'nt ICU
HK value OOL	HF_APR_SCCS_CT	FPU-2.4-3	Temperature hot source	open, no signal or short circuit	Notify HIFI ICC	To be specified
HK value OOL	HF_APR_SCHS_CT	FPU-2.4-4	Temperature cold	open, no signal or short circuit	Notify HIFI ICC	To be specified

Symptoms	TM param	function_id	Function	Mode	Contingency Procedure	Possible Recovery
			source			
HK value OOL	HF_APR_S2K_CT	FPU-2.5-1	2K strap	strap open	Notify HIFI ICC	To be specified
HK value OOL	HF_APR_S2K_CT	FPU-2.5-2	2K strap	short to 4K strap	Notify HIFI ICC	To be specified
HK value OOL	HF_APR_S2K_CT	FPU-2.5-3	2K strap	short to optical bench	Notify HIFI ICC	To be specified
HK value OOL	HF_APR_S4K_CT	FPU-2.5-4	4K strap	strap open	Notify HIFI ICC	To be specified
HK value OOL	HF_APR_S4K_CT	FPU-2.5-5	4K strap	short to optical bench	Notify HIFI ICC	To be specified
loss of image quality	none	FPU-2.6.1-1	Mirrors M9 to M11	contamination or misalignment	Notify HIFI ICC	To be specified
loss of image quality	none	FPU-2.6.1-2	LO optics CLO1 to CLO5	contamination or misalignment	Notify HIFI ICC	To be specified
loss of image quality	none	FPU-2.6.1-3	Diplexer grid 1	contamination or misalignment	Notify HIFI ICC	To be specified
loss of image quality	none	FPU-2.6.1-4	Diplexer grid 2	contamination or misalignment	Notify HIFI ICC	To be specified
loss of image quality	none	FPU-2.6.1-5	Diplexer grid 3	contamination or misalignment	Notify HIFI ICC	To be specified
loss of image quality	none	FPU-2.6.1-6	Rooftop mirror 1	contamination or misalignment	Notify HIFI ICC	To be specified
loss of image quality	none	FPU-2.6.1-7	Rooftop mirror 2	contamination or misalignment	Notify HIFI ICC	To be specified
loss of image quality	none	FPU-2.6.1-8	Optics horizontal	contamination or misalignment	Notify HIFI ICC	To be specified

Symptoms	TM param	function_id	Function	Mode	Contingency Procedure	Possible Recovery
loss of image quality	none	FPU-2.6.1-9	Optics vertical	contamination or misalignment	Notify HIFI ICC	To be specified
loss of image quality	none	FPU-2.6.2-1	Mirrors M9 to M11	contamination or misalignment	Notify HIFI ICC	To be specified
loss of image quality	none	FPU-2.6.2-2	LO optics CLO1 to CLO5	contamination or misalignment	Notify HIFI ICC	To be specified
loss of image quality	none	FPU-2.6.2-3	Diplexer grid 1	contamination or misalignment	Notify HIFI ICC	To be specified
loss of image quality	none	FPU-2.6.2-4	Diplexer grid 2	contamination or misalignment	Notify HIFI ICC	To be specified
loss of image quality	none	FPU-2.6.2-5	Diplexer grid 3	contamination or misalignment	Notify HIFI ICC	To be specified
loss of image quality	none	FPU-2.6.2-6	Rooftop mirror 1	contamination or misalignment	Notify HIFI ICC	To be specified
loss of image quality	none	FPU-2.6.2-7	Rooftop mirror 2	contamination or misalignment	Notify HIFI ICC	To be specified
loss of image quality	none	FPU-2.6.2-8	Optics horizontal	contamination or misalignment	Notify HIFI ICC	To be specified
loss of image quality	none	FPU-2.6.2-9	Optics vertical	contamination or misalignment	Notify HIFI ICC	To be specified
loss of image quality	none	FPU-2.6.3-1	Mirrors M9 to M11	contamination or misalignment	Notify HIFI ICC	To be specified
loss of image quality	none	FPU-2.6.3-2	LO optics CLO1 to	contamination or	Notify HIFI ICC	To be specified

Symptoms	TM param	function_id	Function	Mode	Contingency Procedure	Possible Recovery
			CLO5	misalignment		
loss of image quality	none	FPU-2.6.3-3	Diplexer grid 1	contamination or misalignment	Notify HIFI ICC	To be specified
loss of image quality	none	FPU-2.6.3-4	Diplexer grid 2	contamination or misalignment	Notify HIFI ICC	To be specified
loss of image quality	none	FPU-2.6.3-5	Diplexer grid 3	contamination or misalignment	Notify HIFI ICC	To be specified
loss of image quality	none	FPU-2.6.3-6	Rooftop mirror 1	contamination or misalignment	Notify HIFI ICC	To be specified
loss of image quality	none	FPU-2.6.3-7	Rooftop mirror 2	contamination or misalignment	Notify HIFI ICC	To be specified
loss of image quality	none	FPU-2.6.3-8	Optics horizontal	contamination or misalignment	Notify HIFI ICC	To be specified
loss of image quality	none	FPU-2.6.3-9	Optics vertical	contamination or misalignment	Notify HIFI ICC	To be specified
anomalous HK value	HF_AH1_DPACT_V	FPU-2.6.3-10	Diplexer horizontal	open or short circuit	Notify HIFI ICC	To be specified
loss of image quality	none	FPU-2.6.3-11	Diplexer horizontal	activator or pivots failure	Notify HIFI ICC	To be specified
anomalous HK value	HF_AV1_DPACT_V	FPU-2.6.3-12	Diplexer vertical	open or short circuit	Notify HIFI ICC	To be specified
loss of image quality	none	FPU-2.6.3-13	Diplexer vertical	activator or pivots failure	Notify HIFI ICC	To be specified
loss of image quality	none	FPU-2.6.4-1	Mirrors M9 to M11	contamination or	Notify HIFI ICC	To be specified

Symptoms	TM param	function_id	Function	Mode	Contingency Procedure	Possible Recovery
				misalignment		
loss of image quality	none	FPU-2.6.4-2	LO optics CLO1 to CLO5	contamination or misalignment	Notify HIFI ICC	To be specified
loss of image quality	none	FPU-2.6.4-3	Diplexer grid 1	contamination or misalignment	Notify HIFI ICC	To be specified
loss of image quality	none	FPU-2.6.4-4	Diplexer grid 2	contamination or misalignment	Notify HIFI ICC	To be specified
loss of image quality	none	FPU-2.6.4-5	Diplexer grid 3	contamination or misalignment	Notify HIFI ICC	To be specified
loss of image quality	none	FPU-2.6.4-6	Rooftop mirror 1	contamination or misalignment	Notify HIFI ICC	To be specified
loss of image quality	none	FPU-2.6.4-7	Rooftop mirror 2	contamination or misalignment	Notify HIFI ICC	To be specified
loss of image quality	none	FPU-2.6.4-8	Optics horizontal	contamination or misalignment	Notify HIFI ICC	To be specified
loss of image quality	none	FPU-2.6.4-9	Optics vertical	contamination or misalignment	Notify HIFI ICC	To be specified
anomalous HK value	HF_AH1_DPACT_V	FPU-2.6.4-10	Diplexer horizontal	open or short circuit	Notify HIFI ICC	To be specified
loss of image quality	none	FPU-2.6.4-11	Diplexer horizontal	activator or pivots failure	Notify HIFI ICC	To be specified
anomalous HK value	HF_AV1_DPACT_V	FPU-2.6.4-12	Diplexer vertical	open or short circuit	Notify HIFI ICC	To be specified

Symptoms	TM param	function_id	Function	Mode	Contingency Procedure	Possible Recovery
loss of image quality	none	FPU-2.6.4-13	Diplexer vertical	activator or pivots failure	Notify HIFI ICC	To be specified
loss of image quality	none	FPU-2.6.5-1	Mirrors M9 to M11	contamination or misalignment	Notify HIFI ICC	To be specified
loss of image quality	none	FPU-2.6.5-2	LO optics CLO1 to CLO5	contamination or misalignment	Notify HIFI ICC	To be specified
loss of image quality	none	FPU-2.6.5-3	Diplexer grid 1	contamination or misalignment	Notify HIFI ICC	To be specified
loss of image quality	none	FPU-2.6.5-4	Diplexer grid 2	contamination or misalignment	Notify HIFI ICC	To be specified
loss of image quality	none	FPU-2.6.5-5	Diplexer grid 3	contamination or misalignment	Notify HIFI ICC	To be specified
loss of image quality	none	FPU-2.6.5-6	Rooftop mirror 1	contamination or misalignment	Notify HIFI ICC	To be specified
loss of image quality	none	FPU-2.6.5-7	Rooftop mirror 2	contamination or misalignment	Notify HIFI ICC	To be specified
loss of image quality	none	FPU-2.6.5-8	Optics horizontal	contamination or misalignment	Notify HIFI ICC	To be specified
loss of image quality	none	FPU-2.6.5-9	Optics vertical	contamination or misalignment	Notify HIFI ICC	To be specified
anomalous HK value	HF_AH1_DPACT_V	FPU-2.6.5-10	Diplexer horizontal	open or short circuit	Notify HIFI ICC	To be specified
loss of image quality	none	FPU-2.6.5-11	Diplexer horizontal	activator or pivots failure	Notify HIFI ICC	To be specified

Symptoms	TM param	function_id	Function	Mode	Contingency Procedure	Possible Recovery
anomalous HK value	HF_AV1_DPACT_V	FPU-2.6.5-12	Diplexer vertical	open or short circuit	Notify HIFI ICC	To be specified
loss of image quality	none	FPU-2.6.5-13	Diplexer vertical	activator or pivots failure	Notify HIFI ICC	To be specified
loss of image quality	none	FPU-2.6.6-1	Mirrors M9 to M11	contamination or misalignment	Notify HIFI ICC	To be specified
loss of image quality	none	FPU-2.6.6-2	LO optics CLO1 to CLO5	contamination or misalignment	Notify HIFI ICC	To be specified
loss of image quality	none	FPU-2.6.6-3	Diplexer grid 1	contamination or misalignment	Notify HIFI ICC	To be specified
loss of image quality	none	FPU-2.6.6-4	Diplexer grid 2	contamination or misalignment	Notify HIFI ICC	To be specified
loss of image quality	none	FPU-2.6.6-5	Diplexer grid 3	contamination or misalignment	Notify HIFI ICC	To be specified
loss of image quality	none	FPU-2.6.6-6	Rooftop mirror 1	contamination or misalignment	Notify HIFI ICC	To be specified
loss of image quality	none	FPU-2.6.6-7	Rooftop mirror 2	contamination or misalignment	Notify HIFI ICC	To be specified
loss of image quality	none	FPU-2.6.6-8	Optics horizontal	contamination or misalignment	Notify HIFI ICC	To be specified
loss of image quality	none	FPU-2.6.6-9	Optics vertical	contamination or misalignment	Notify HIFI ICC	To be specified
anomalous HK value	HF_AH1_DPACT_V	FPU-2.6.6-10	Diplexer horizontal	open or short circuit	Notify HIFI ICC	To be specified

Symptoms	TM param	function_id	Function	Mode	Contingency Procedure	Possible Recovery
loss of image quality	none	FPU-2.6.6-11	Diplexer horizontal	activator or pivots failure	Notify HIFI ICC	To be specified
anomalous HK value	HF_AV1_DPACT_V	FPU-2.6.6-12	Diplexer vertical	open or short circuit	Notify HIFI ICC	To be specified
loss of image quality	none	FPU-2.6.6-13	Diplexer vertical	activator or pivots failure	Notify HIFI ICC	To be specified
loss of image quality	none	FPU-2.6.7-1	Mirrors M9 to M11	contamination or misalignment	Notify HIFI ICC	To be specified
loss of image quality	none	FPU-2.6.7-2	LO optics CLO1 to CLO5	contamination or misalignment	Notify HIFI ICC	To be specified
loss of image quality	none	FPU-2.6.7-3	Diplexer grid 1	contamination or misalignment	Notify HIFI ICC	To be specified
loss of image quality	none	FPU-2.6.7-4	Diplexer grid 2	contamination or misalignment	Notify HIFI ICC	To be specified
loss of image quality	none	FPU-2.6.7-5	Diplexer grid 3	contamination or misalignment	Notify HIFI ICC	To be specified
loss of image quality	none	FPU-2.6.7-6	Rooftop mirror 1	contamination or misalignment	Notify HIFI ICC	To be specified
loss of image quality	none	FPU-2.6.7-7	Rooftop mirror 2	contamination or misalignment	Notify HIFI ICC	To be specified
loss of image quality	none	FPU-2.6.7-8	Optics horizontal	contamination or misalignment	Notify HIFI ICC	To be specified
loss of image quality	none	FPU-2.6.7-9	Optics vertical	contamination or misalignment	Notify HIFI ICC	To be specified

Symptoms	TM param	function_id	Function	Mode	Contingency Procedure	Possible Recovery
anomalous HK value	HF_AH1_DPACT_V	FPU-2.6.7-10	Diplexer horizontal	open or short circuit	Notify HIFI ICC	To be specified
loss of image quality	none	FPU-2.6.7-11	Diplexer horizontal	activator or pivots failure	Notify HIFI ICC	To be specified
anomalous HK value	HF_AV1_DPACT_V	FPU-2.6.7-12	Diplexer vertical	open or short circuit	Notify HIFI ICC	To be specified
loss of image quality	none	FPU-2.6.7-13	Diplexer vertical	activator or pivots failure	Notify HIFI ICC	To be specified
no science data	none	FPU-2.7.1.1-1	Cryo-strap 2K	strap open	Notify HIFI ICC	To be specified
no science data	none	FPU-2.7.1.1-2	Cryo-strap 4K	strap open	Notify HIFI ICC	To be specified
no science data	none	FPU-2.7.1.1-3	Mixer output	open, no signal or short circuit	Notify HIFI ICC	To be specified
anomalous HK value	HF_AH1_MXJNC-V	FPU-2.7.1.1-4	Mixer bias	open or short circuit	Notify HIFI ICC	To be specified
no science data	none	FPU-2.7.1.1-5	First IF Ampl. output	open, no signal or short circuit	Notify HIFI ICC	To be specified
anomalous HK value	HF_AH2_D_FIF1_V	FPU-2.7.1.1-6	First IF Ampl. drain 1	open or short circuit	Notify HIFI ICC	To be specified
anomalous HK value	HF_AH2_G_FIF1_V	FPU-2.7.1.1-7	First IF Ampl. gate 1	open or short circuit	Notify HIFI ICC	To be specified
anomalous HK value	HF_AH2_D_FIF2_V	FPU-2.7.1.1-8	First IF Ampl. drain 2.	open or short circuit	Notify HIFI ICC	To be specified
anomalous HK value	HF_AH2_G_FIF2_V	FPU-2.7.1.1-9	First IF Ampl. gate 2	open or short circuit	Notify HIFI ICC	To be specified
no science data	none	FPU-2.7.1.1-	Sec. IF Ampl.output	open, no signal or short circuit	Notify HIFI ICC	To be specified

Symptoms	TM param	function_id	Function	Mode	Contingency Procedure	Possible Recovery
		10				
anomalous HK value	HF_AH2_D_SIF1_V	FPU-2.7.1.1-11	Sec. IF Ampl. drain 1	open or short circuit	Notify HIFI ICC	To be specified
anomalous HK value	HF_AH2_G_SIF1_V	FPU-2.7.1.1-12	Sec. IF Ampl. gate 1	open or short circuit	Notify HIFI ICC	To be specified
anomalous HK value	HF_AH2_D_SIF2_V	FPU-2.7.1.1-13	Sec. IF Ampl. drain 2	open or short circuit	Notify HIFI ICC	To be specified
anomalous HK value	HF_AH2_G_SIF2_V	FPU-2.7.1.1-14	Sec. IF Ampl. gate 2	open or short circuit	Notify HIFI ICC	To be specified
anomalous HK value	HF_AH2_D_SIF3_V	FPU-2.7.1.1-15	Sec. IF Ampl. drain 3	open or short circuit	Notify HIFI ICC	To be specified
anomalous HK value	HF_AH2_G_SIF3_V	FPU-2.7.1.1-16	Sec. IF Ampl. gate 3	open or short circuit	Notify HIFI ICC	To be specified
no science data	none	FPU-2.7.1.2-1	Cryo-strap 2K	strap open	Notify HIFI ICC	To be specified
no science data	none	FPU-2.7.1.2-2	Cryo-strap 4K	strap open	Notify HIFI ICC	To be specified
no science data	none	FPU-2.7.1.2-3	Mixer output	open, no signal or short circuit	Notify HIFI ICC	To be specified
anomalous HK value	HF_AV1_MXJNC-V	FPU-2.7.1.2-4	Mixer bias	open or short circuit	Notify HIFI ICC	To be specified
no science data	none	FPU-2.7.1.2-5	First IF Ampl. output	open, no signal or short circuit	Notify HIFI ICC	To be specified
anomalous HK value	HF_AV2_D_FIF1_V	FPU-2.7.1.2-6	First IF Ampl. drain 1	open or short circuit	Notify HIFI ICC	To be specified

Symptoms	TM param	function_id	Function	Mode	Contingency Procedure	Possible Recovery
anomalous HK value	HF_AV2_G_FIF1_V	FPU-2.7.1.2-7	First IF Ampl. gate 1	open or short circuit	Notify HIFI ICC	To be specified
anomalous HK value	HF_AV2_D_FIF2_V	FPU-2.7.1.2-8	First IF Ampl. drain 2.	open or short circuit	Notify HIFI ICC	To be specified
anomalous HK value	HF_AV2_G_FIF2_V	FPU-2.7.1.2-9	First IF Ampl. gate 2	open or short circuit	Notify HIFI ICC	To be specified
no science data	none	FPU-2.7.1.2-10	Sec. IF Ampl.output	open, no signal or short circuit	Notify HIFI ICC	To be specified
anomalous HK value	HF_AV2_D_SIF1_V	FPU-2.7.1.2-11	Sec. IF Ampl. drain 1	open or short circuit	Notify HIFI ICC	To be specified
anomalous HK value	HF_AV2_G_SIF1_V	FPU-2.7.1.2-12	Sec. IF Ampl. gate 1	open or short circuit	Notify HIFI ICC	To be specified
anomalous HK value	HF_AV2_D_SIF2_V	FPU-2.7.1.2-13	Sec. IF Ampl. drain 2	open or short circuit	Notify HIFI ICC	To be specified
anomalous HK value	HF_AV2_G_SIF2_V	FPU-2.7.1.2-14	Sec. IF Ampl. gate 2	open or short circuit	Notify HIFI ICC	To be specified
anomalous HK value	HF_AV2_D_SIF3_V	FPU-2.7.1.2-15	Sec. IF Ampl. drain 3	open or short circuit	Notify HIFI ICC	To be specified
anomalous HK value	HF_AV2_G_SIF3_V	FPU-2.7.1.2-16	Sec. IF Ampl. gate 3	open or short circuit	Notify HIFI ICC	To be specified
no science data	none	FPU-2.7.2.1-1	Cryo-strap 2K	strap open	Notify HIFI ICC	To be specified
no science data	none	FPU-2.7.2.1-2	Cryo-strap 4K	strap open	Notify HIFI ICC	To be specified

Symptoms	TM param	function_id	Function	Mode	Contingency Procedure	Possible Recovery
no science data	none	FPU-2.7.2.1-3	Mixer output	open, no signal or short circuit	Notify HIFI ICC	To be specified
anomalous HK value	HF_AH1_MXJNC-V	FPU-2.7.2.1-4	Mixer bias	open or short circuit	Notify HIFI ICC	To be specified
no science data	none	FPU-2.7.2.1-5	First IF Ampl. output	open, no signal or short circuit	Notify HIFI ICC	To be specified
anomalous HK value	HF_AH2_D_FIF1_V	FPU-2.7.2.1-6	First IF Ampl. drain 1	open or short circuit	Notify HIFI ICC	To be specified
anomalous HK value	HF_AH2_G_FIF1_V	FPU-2.7.2.1-7	First IF Ampl. gate 1	open or short circuit	Notify HIFI ICC	To be specified
anomalous HK value	HF_AH2_D_FIF2_V	FPU-2.7.2.1-8	First IF Ampl. drain 2.	open or short circuit	Notify HIFI ICC	To be specified
anomalous HK value	HF_AH2_G_FIF2_V	FPU-2.7.2.1-9	First IF Ampl. gate 2	open or short circuit	Notify HIFI ICC	To be specified
no science data	none	FPU-2.7.2.1-10	Sec. IF Ampl.output	open, no signal or short circuit	Notify HIFI ICC	To be specified
anomalous HK value	HF_AH2_D_SIF1_V	FPU-2.7.2.1-11	Sec. IF Ampl. drain 1	open or short circuit	Notify HIFI ICC	To be specified
anomalous HK value	HF_AH2_G_SIF1_V	FPU-2.7.2.1-12	Sec. IF Ampl. gate 1	open or short circuit	Notify HIFI ICC	To be specified
anomalous HK value	HF_AH2_D_SIF2_V	FPU-2.7.2.1-13	Sec. IF Ampl. drain 2	open or short circuit	Notify HIFI ICC	To be specified
anomalous HK value	HF_AH2_G_SIF2_V	FPU-2.7.2.1-14	Sec. IF Ampl. gate 2	open or short circuit	Notify HIFI ICC	To be specified

Symptoms	TM param	function_id	Function	Mode	Contingency Procedure	Possible Recovery
anomalous HK value	HF_AH2_D_SIF3_V	FPU-2.7.2.1-15	Sec. IF Ampl. drain 3	open or short circuit	Notify HIFI ICC	To be specified
anomalous HK value	HF_AH2_G_SIF3_V	FPU-2.7.2.1-16	Sec. IF Ampl. gate 3	open or short circuit	Notify HIFI ICC	To be specified
no science data	none	FPU-2.7.2.2-1	Cryo-strap 2K	strap open	Notify HIFI ICC	To be specified
no science data	none	FPU-2.7.2.2-2	Cryo-strap 4K	strap open	Notify HIFI ICC	To be specified
no science data	none	FPU-2.7.2.2-3	Mixer output	open, no signal or short circuit	Notify HIFI ICC	To be specified
anomalous HK value	HF_AV1_MXJNC-V	FPU-2.7.2.2-4	Mixer bias	open or short circuit	Notify HIFI ICC	To be specified
no science data	none	FPU-2.7.2.2-5	First IF Ampl. output	open, no signal or short circuit	Notify HIFI ICC	To be specified
anomalous HK value	HF_AV2_D_FIF1_V	FPU-2.7.2.2-6	First IF Ampl. drain 1	open or short circuit	Notify HIFI ICC	To be specified
anomalous HK value	HF_AV2_G_FIF1_V	FPU-2.7.2.2-7	First IF Ampl. gate 1	open or short circuit	Notify HIFI ICC	To be specified
anomalous HK value	HF_AV2_D_FIF2_V	FPU-2.7.2.2-8	First IF Ampl. drain 2.	open or short circuit	Notify HIFI ICC	To be specified
anomalous HK value	HF_AV2_G_FIF2_V	FPU-2.7.2.2-9	First IF Ampl. gate 2	open or short circuit	Notify HIFI ICC	To be specified
no science data	none	FPU-2.7.2.2-10	Sec. IF Ampl.output	open, no signal or short circuit	Notify HIFI ICC	To be specified
anomalous HK	HF_AV2_D_SIF1_V	FPU-2.7.2.2-	Sec. IF Ampl. drain	open or short circuit	Notify HIFI ICC	To be specified

Symptoms	TM param	function_id	Function	Mode	Contingency Procedure	Possible Recovery
value		11	1			
anomalous HK value	HF_AV2_G_SIF1_V	FPU-2.7.2.2-12	Sec. IF Ampl. gate 1	open or short circuit	Notify HIFI ICC	To be specified
anomalous HK value	HF_AV2_D_SIF2_V	FPU-2.7.2.2-13	Sec. IF Ampl. drain 2	open or short circuit	Notify HIFI ICC	To be specified
anomalous HK value	HF_AV2_G_SIF2_V	FPU-2.7.2.2-14	Sec. IF Ampl. gate 2	open or short circuit	Notify HIFI ICC	To be specified
anomalous HK value	HF_AV2_D_SIF3_V	FPU-2.7.2.2-15	Sec. IF Ampl. drain 3	open or short circuit	Notify HIFI ICC	To be specified
anomalous HK value	HF_AV2_G_SIF3_V	FPU-2.7.2.2-16	Sec. IF Ampl. gate 3	open or short circuit	Notify HIFI ICC	To be specified
no science data	none	FPU-2.7.3.1-1	Cryo-strap 2K	strap open	Notify HIFI ICC	To be specified
no science data	none	FPU-2.7.3.1-2	Cryo-strap 4K	strap open	Notify HIFI ICC	To be specified
no science data	none	FPU-2.7.3.1-3	Mixer output	open, no signal or short circuit	Notify HIFI ICC	To be specified
anomalous HK value	HF_AH1_MXJNC-V	FPU-2.7.3.1-4	Mixer bias	open or short circuit	Notify HIFI ICC	To be specified
no science data	none	FPU-2.7.3.1-5	First IF Ampl. output	open, no signal or short circuit	Notify HIFI ICC	To be specified
anomalous HK value	HF_AH2_D_FIF1_V	FPU-2.7.3.1-6	First IF Ampl. drain 1	open or short circuit	Notify HIFI ICC	To be specified
anomalous HK value	HF_AH2_G_FIF1_V	FPU-2.7.3.1-7	First IF Ampl. gate 1	open or short circuit	Notify HIFI ICC	To be specified

Symptoms	TM param	function_id	Function	Mode	Contingency Procedure	Possible Recovery
anomalous HK value	HF_AH2_D_FIF2_V	FPU-2.7.3.1-8	First IF Ampl. drain 2.	open or short circuit	Notify HIFI ICC	To be specified
anomalous HK value	HF_AH2_G_FIF2_V	FPU-2.7.3.1-9	First IF Ampl. gate 2	open or short circuit	Notify HIFI ICC	To be specified
no science data	none	FPU-2.7.3.1-10	Sec. IF Ampl.output	open, no signal or short circuit	Notify HIFI ICC	To be specified
anomalous HK value	HF_AH2_D_SIF1_V	FPU-2.7.3.1-11	Sec. IF Ampl. drain 1	open or short circuit	Notify HIFI ICC	To be specified
anomalous HK value	HF_AH2_G_SIF1_V	FPU-2.7.3.1-12	Sec. IF Ampl. gate 1	open or short circuit	Notify HIFI ICC	To be specified
anomalous HK value	HF_AH2_D_SIF2_V	FPU-2.7.3.1-13	Sec. IF Ampl. drain 2	open or short circuit	Notify HIFI ICC	To be specified
anomalous HK value	HF_AH2_G_SIF2_V	FPU-2.7.3.1-14	Sec. IF Ampl. gate 2	open or short circuit	Notify HIFI ICC	To be specified
anomalous HK value	HF_AH2_D_SIF3_V	FPU-2.7.3.1-15	Sec. IF Ampl. drain 3	open or short circuit	Notify HIFI ICC	To be specified
anomalous HK value	HF_AH2_G_SIF3_V	FPU-2.7.3.1-16	Sec. IF Ampl. gate 3	open or short circuit	Notify HIFI ICC	To be specified
no science data	none	FPU-2.7.3.2-1	Cryo-strap 2K	strap open	Notify HIFI ICC	To be specified
no science data	none	FPU-2.7.3.2-2	Cryo-strap 4K	strap open	Notify HIFI ICC	To be specified
no science data	none	FPU-2.7.3.2-3	Mixer output	open, no signal or short circuit	Notify HIFI ICC	To be specified
anomalous HK	HF_AV1_MXJNC-V	FPU-2.7.3.2-4	Mixer bias	open or short circuit	Notify HIFI ICC	To be specified

Symptoms	TM param	function_id	Function	Mode	Contingency Procedure	Possible Recovery
value						
no science data	none	FPU-2.7.3.2-5	First IF Ampl. output	open, no signal or short circuit	Notify HIFI ICC	To be specified
anomalous HK value	HF_AV2_D_FIF1_V	FPU-2.7.3.2-6	First IF Ampl. drain 1	open or short circuit	Notify HIFI ICC	To be specified
anomalous HK value	HF_AV2_G_FIF1_V	FPU-2.7.3.2-7	First IF Ampl. gate 1	open or short circuit	Notify HIFI ICC	To be specified
anomalous HK value	HF_AV2_D_FIF2_V	FPU-2.7.3.2-8	First IF Ampl. drain 2.	open or short circuit	Notify HIFI ICC	To be specified
anomalous HK value	HF_AV2_G_FIF2_V	FPU-2.7.3.2-9	First IF Ampl. gate 2	open or short circuit	Notify HIFI ICC	To be specified
no science data	none	FPU-2.7.3.2-10	Sec. IF Ampl.output	open, no signal or short circuit	Notify HIFI ICC	To be specified
anomalous HK value	HF_AV2_D_SIF1_V	FPU-2.7.3.2-11	Sec. IF Ampl. drain 1	open or short circuit	Notify HIFI ICC	To be specified
anomalous HK value	HF_AV2_G_SIF1_V	FPU-2.7.3.2-12	Sec. IF Ampl. gate 1	open or short circuit	Notify HIFI ICC	To be specified
anomalous HK value	HF_AV2_D_SIF2_V	FPU-2.7.3.2-13	Sec. IF Ampl. drain 2	open or short circuit	Notify HIFI ICC	To be specified
anomalous HK value	HF_AV2_G_SIF2_V	FPU-2.7.3.2-14	Sec. IF Ampl. gate 2	open or short circuit	Notify HIFI ICC	To be specified
anomalous HK value	HF_AV2_D_SIF3_V	FPU-2.7.3.2-15	Sec. IF Ampl. drain 3	open or short circuit	Notify HIFI ICC	To be specified

Symptoms	TM param	function_id	Function	Mode	Contingency Procedure	Possible Recovery
anomalous HK value	HF_AV2_G_SIF3_V	FPU-2.7.3.2-16	Sec. IF Ampl. gate 3	open or short circuit	Notify HIFI ICC	To be specified
no science data	none	FPU-2.7.4.1-1	Cryo-strap 2K	strap open	Notify HIFI ICC	To be specified
no science data	none	FPU-2.7.4.1-2	Cryo-strap 4K	strap open	Notify HIFI ICC	To be specified
no science data	none	FPU-2.7.4.1-3	Mixer output	open, no signal or short circuit	Notify HIFI ICC	To be specified
anomalous HK value	HF_AH1_MXJNC-V	FPU-2.7.4.1-4	Mixer bias	open or short circuit	Notify HIFI ICC	To be specified
no science data	none	FPU-2.7.4.1-5	First IF Ampl. output	open, no signal or short circuit	Notify HIFI ICC	To be specified
anomalous HK value	HF_AH2_D_FIF1_V	FPU-2.7.4.1-6	First IF Ampl. drain 1	open or short circuit	Notify HIFI ICC	To be specified
anomalous HK value	HF_AH2_G_FIF1_V	FPU-2.7.4.1-7	First IF Ampl. gate 1	open or short circuit	Notify HIFI ICC	To be specified
anomalous HK value	HF_AH2_D_FIF2_V	FPU-2.7.4.1-8	First IF Ampl. drain 2.	open or short circuit	Notify HIFI ICC	To be specified
anomalous HK value	HF_AH2_G_FIF2_V	FPU-2.7.4.1-9	First IF Ampl. gate 2	open or short circuit	Notify HIFI ICC	To be specified
no science data	none	FPU-2.7.4.1-10	Sec. IF Ampl.output	open, no signal or short circuit	Notify HIFI ICC	To be specified
anomalous HK value	HF_AH2_D_SIF1_V	FPU-2.7.4.1-11	Sec. IF Ampl. drain 1	open or short circuit	Notify HIFI ICC	To be specified
anomalous HK	HF_AH2_G_SIF1_V	FPU-2.7.4.1-	Sec. IF Ampl. gate 1	open or short circuit	Notify HIFI ICC	To be specified

Symptoms	TM param	function_id	Function	Mode	Contingency Procedure	Possible Recovery
value		12				
anomalous HK value	HF_AH2_D_SIF2_V	FPU-2.7.4.1-13	Sec. IF Ampl. drain 2	open or short circuit	Notify HIFI ICC	To be specified
anomalous HK value	HF_AH2_G_SIF2_V	FPU-2.7.4.1-14	Sec. IF Ampl. gate 2	open or short circuit	Notify HIFI ICC	To be specified
anomalous HK value	HF_AH2_D_SIF3_V	FPU-2.7.4.1-15	Sec. IF Ampl. drain 3	open or short circuit	Notify HIFI ICC	To be specified
anomalous HK value	HF_AH2_G_SIF3_V	FPU-2.7.4.1-16	Sec. IF Ampl. gate 3	open or short circuit	Notify HIFI ICC	To be specified
no science data	none	FPU-2.7.4.2-1	Cryo-strap 2K	strap open	Notify HIFI ICC	To be specified
no science data	none	FPU-2.7.4.2-2	Cryo-strap 4K	strap open	Notify HIFI ICC	To be specified
no science data	none	FPU-2.7.4.2-3	Mixer output	open, no signal or short circuit	Notify HIFI ICC	To be specified
anomalous HK value	HF_AV1_MXJNC-V	FPU-2.7.4.2-4	Mixer bias	open or short circuit	Notify HIFI ICC	To be specified
no science data	none	FPU-2.7.4.2-5	First IF Ampl. output	open, no signal or short circuit	Notify HIFI ICC	To be specified
anomalous HK value	HF_AV2_D_FIF1_V	FPU-2.7.4.2-6	First IF Ampl. drain 1	open or short circuit	Notify HIFI ICC	To be specified
anomalous HK value	HF_AV2_G_FIF1_V	FPU-2.7.4.2-7	First IF Ampl. gate 1	open or short circuit	Notify HIFI ICC	To be specified
anomalous HK value	HF_AV2_D_FIF2_V	FPU-2.7.4.2-8	First IF Ampl. drain 2.	open or short circuit	Notify HIFI ICC	To be specified

Symptoms	TM param	function_id	Function	Mode	Contingency Procedure	Possible Recovery
anomalous HK value	HF_AV2_G_FIF2_V	FPU-2.7.4.2-9	First IF Ampl. gate 2	open or short circuit	Notify HIFI ICC	To be specified
no science data	none	FPU-2.7.4.2-10	Sec. IF Ampl.output	open, no signal or short circuit	Notify HIFI ICC	To be specified
anomalous HK value	HF_AV2_D_SIF1_V	FPU-2.7.4.2-11	Sec. IF Ampl. drain 1	open or short circuit	Notify HIFI ICC	To be specified
anomalous HK value	HF_AV2_G_SIF1_V	FPU-2.7.4.2-12	Sec. IF Ampl. gate 1	open or short circuit	Notify HIFI ICC	To be specified
anomalous HK value	HF_AV2_D_SIF2_V	FPU-2.7.4.2-13	Sec. IF Ampl. drain 2	open or short circuit	Notify HIFI ICC	To be specified
anomalous HK value	HF_AV2_G_SIF2_V	FPU-2.7.4.2-14	Sec. IF Ampl. gate 2	open or short circuit	Notify HIFI ICC	To be specified
anomalous HK value	HF_AV2_D_SIF3_V	FPU-2.7.4.2-15	Sec. IF Ampl. drain 3	open or short circuit	Notify HIFI ICC	To be specified
anomalous HK value	HF_AV2_G_SIF3_V	FPU-2.7.4.2-16	Sec. IF Ampl. gate 3	open or short circuit	Notify HIFI ICC	To be specified
no science data	none	FPU-2.7.5.1-1	Cryo-strap 2K	strap open	Notify HIFI ICC	To be specified
no science data	none	FPU-2.7.5.1-2	Cryo-strap 4K	strap open	Notify HIFI ICC	To be specified
no science data	none	FPU-2.7.5.1-3	Mixer output	open, no signal or short circuit	Notify HIFI ICC	To be specified
anomalous HK value	HF_AH1_MXJNC-V	FPU-2.7.5.1-4	Mixer bias	open or short circuit	Notify HIFI ICC	To be specified
no science data	none	FPU-2.7.5.1-5	First IF Ampl.	open, no signal or short circuit	Notify HIFI ICC	To be specified

Symptoms	TM param	function_id	Function	Mode	Contingency Procedure	Possible Recovery
			output			
anomalous HK value	HF_AH2_D_FIF1_V	FPU-2.7.5.1-6	First IF Ampl. drain 1	open or short circuit	Notify HIFI ICC	To be specified
anomalous HK value	HF_AH2_G_FIF1_V	FPU-2.7.5.1-7	First IF Ampl. gate 1	open or short circuit	Notify HIFI ICC	To be specified
anomalous HK value	HF_AH2_D_FIF2_V	FPU-2.7.5.1-8	First IF Ampl. drain 2.	open or short circuit	Notify HIFI ICC	To be specified
anomalous HK value	HF_AH2_G_FIF2_V	FPU-2.7.5.1-9	First IF Ampl. gate 2	open or short circuit	Notify HIFI ICC	To be specified
no science data	none	FPU-2.7.5.1-10	Sec. IF Ampl.output	open, no signal or short circuit	Notify HIFI ICC	To be specified
anomalous HK value	HF_AH2_D_SIF1_V	FPU-2.7.5.1-11	Sec. IF Ampl. drain 1	open or short circuit	Notify HIFI ICC	To be specified
anomalous HK value	HF_AH2_G_SIF1_V	FPU-2.7.5.1-12	Sec. IF Ampl. gate 1	open or short circuit	Notify HIFI ICC	To be specified
anomalous HK value	HF_AH2_D_SIF2_V	FPU-2.7.5.1-13	Sec. IF Ampl. drain 2	open or short circuit	Notify HIFI ICC	To be specified
anomalous HK value	HF_AH2_G_SIF2_V	FPU-2.7.5.1-14	Sec. IF Ampl. gate 2	open or short circuit	Notify HIFI ICC	To be specified
anomalous HK value	HF_AH2_D_SIF3_V	FPU-2.7.5.1-15	Sec. IF Ampl. drain 3	open or short circuit	Notify HIFI ICC	To be specified
anomalous HK value	HF_AH2_G_SIF3_V	FPU-2.7.5.1-16	Sec. IF Ampl. gate 3	open or short circuit	Notify HIFI ICC	To be specified

Symptoms	TM param	function_id	Function	Mode	Contingency Procedure	Possible Recovery
no science data	none	FPU-2.7.5.2-1	Cryo-strap 2K	strap open	Notify HIFI ICC	To be specified
no science data	none	FPU-2.7.5.2-2	Cryo-strap 4K	strap open	Notify HIFI ICC	To be specified
no science data	none	FPU-2.7.5.2-3	Mixer output	open, no signal or short circuit	Notify HIFI ICC	To be specified
anomalous HK value	HF_AV1_MXJNC-V	FPU-2.7.5.2-4	Mixer bias	open or short circuit	Notify HIFI ICC	To be specified
no science data	none	FPU-2.7.5.2-5	First IF Ampl. output	open, no signal or short circuit	Notify HIFI ICC	To be specified
anomalous HK value	HF_AV2_D_FIF1_V	FPU-2.7.5.2-6	First IF Ampl. drain 1	open or short circuit	Notify HIFI ICC	To be specified
anomalous HK value	HF_AV2_G_FIF1_V	FPU-2.7.5.2-7	First IF Ampl. gate 1	open or short circuit	Notify HIFI ICC	To be specified
anomalous HK value	HF_AV2_D_FIF2_V	FPU-2.7.5.2-8	First IF Ampl. drain 2.	open or short circuit	Notify HIFI ICC	To be specified
anomalous HK value	HF_AV2_G_FIF2_V	FPU-2.7.5.2-9	First IF Ampl. gate 2	open or short circuit	Notify HIFI ICC	To be specified
no science data	none	FPU-2.7.5.2-10	Sec. IF Ampl.output	open, no signal or short circuit	Notify HIFI ICC	To be specified
anomalous HK value	HF_AV2_D_SIF1_V	FPU-2.7.5.2-11	Sec. IF Ampl. drain 1	open or short circuit	Notify HIFI ICC	To be specified
anomalous HK value	HF_AV2_G_SIF1_V	FPU-2.7.5.2-12	Sec. IF Ampl. gate 1	open or short circuit	Notify HIFI ICC	To be specified
anomalous HK	HF_AV2_D_SIF2_V	FPU-2.7.5.2-	Sec. IF Ampl. drain	open or short circuit	Notify HIFI ICC	To be specified

Symptoms	TM param	function_id	Function	Mode	Contingency Procedure	Possible Recovery
value		13	2			
anomalous HK value	HF_AV2_G_SIF2_V	FPU-2.7.5.2-14	Sec. IF Ampl. gate 2	open or short circuit	Notify HIFI ICC	To be specified
anomalous HK value	HF_AV2_D_SIF3_V	FPU-2.7.5.2-15	Sec. IF Ampl. drain 3	open or short circuit	Notify HIFI ICC	To be specified
anomalous HK value	HF_AV2_G_SIF3_V	FPU-2.7.5.2-16	Sec. IF Ampl. gate 3	open or short circuit	Notify HIFI ICC	To be specified
no science data	none	FPU-2.7.6.1-1	Cryo-strap 2K	strap open	Notify HIFI ICC	To be specified
no science data	none	FPU-2.7.6.1-2	Cryo-strap 4K	strap open	Notify HIFI ICC	To be specified
no science data	none	FPU-2.7.6.1-3	Mixer output	open, no signal or short circuit	Notify HIFI ICC	To be specified
anomalous HK value	HF_AH1_MXJNC-V	FPU-2.7.6.1-4	Mixer bias	open or short circuit	Notify HIFI ICC	To be specified
no science data	none	FPU-2.7.6.1-5	First IF Ampl. output	open, no signal or short circuit	Notify HIFI ICC	To be specified
anomalous HK value	HF_AH2_D_FIF1_V	FPU-2.7.6.1-6	First IF Ampl. drain 1	open or short circuit	Notify HIFI ICC	To be specified
anomalous HK value	HF_AH2_G_FIF1_V	FPU-2.7.6.1-7	First IF Ampl. gate 1	open or short circuit	Notify HIFI ICC	To be specified
anomalous HK value	HF_AH2_D_FIF2_V	FPU-2.7.6.1-8	First IF Ampl. drain 2.	open or short circuit	Notify HIFI ICC	To be specified
anomalous HK value	HF_AH2_G_FIF2_V	FPU-2.7.6.1-9	First IF Ampl. gate 2	open or short circuit	Notify HIFI ICC	To be specified

Symptoms	TM param	function_id	Function	Mode	Contingency Procedure	Possible Recovery
no science data	none	FPU-2.7.6.1-10	Sec. IF Ampl.output	open, no signal or short circuit	Notify HIFI ICC	To be specified
anomalous HK value	HF_AH2_D_SIF1_V	FPU-2.7.6.1-11	Sec. IF Ampl. drain 1	open or short circuit	Notify HIFI ICC	To be specified
anomalous HK value	HF_AH2_G_SIF1_V	FPU-2.7.6.1-12	Sec. IF Ampl. gate 1	open or short circuit	Notify HIFI ICC	To be specified
anomalous HK value	HF_AH2_D_SIF2_V	FPU-2.7.6.1-13	Sec. IF Ampl. drain 2	open or short circuit	Notify HIFI ICC	To be specified
anomalous HK value	HF_AH2_G_SIF2_V	FPU-2.7.6.1-14	Sec. IF Ampl. gate 2	open or short circuit	Notify HIFI ICC	To be specified
anomalous HK value	HF_AH2_D_SIF3_V	FPU-2.7.6.1-15	Sec. IF Ampl. drain 3	open or short circuit	Notify HIFI ICC	To be specified
anomalous HK value	HF_AH2_G_SIF3_V	FPU-2.7.6.1-16	Sec. IF Ampl. gate 3	open or short circuit	Notify HIFI ICC	To be specified
no science data	none	FPU-2.7.6.2-1	Cryo-strap 2K	strap open	Notify HIFI ICC	To be specified
no science data	none	FPU-2.7.6.2-2	Cryo-strap 4K	strap open	Notify HIFI ICC	To be specified
no science data	none	FPU-2.7.6.2-3	Mixer output	open, no signal or short circuit	Notify HIFI ICC	To be specified
anomalous HK value	HF_AV1_MXJNC-V	FPU-2.7.6.2-4	Mixer bias	open or short circuit	Notify HIFI ICC	To be specified
no science data	none	FPU-2.7.6.2-5	First IF Ampl. output	open, no signal or short circuit	Notify HIFI ICC	To be specified
anomalous HK	HF_AV2_D_FIF1_V	FPU-2.7.6.2-6	First IF Ampl. drain	open or short circuit	Notify HIFI ICC	To be specified

Symptoms	TM param	function_id	Function	Mode	Contingency Procedure	Possible Recovery
value			1			
anomalous HK value	HF_AV2_G_FIF1_V	FPU-2.7.6.2-7	First IF Ampl. gate 1	open or short circuit	Notify HIFI ICC	To be specified
anomalous HK value	HF_AV2_D_FIF2_V	FPU-2.7.6.2-8	First IF Ampl. drain 2.	open or short circuit	Notify HIFI ICC	To be specified
anomalous HK value	HF_AV2_G_FIF2_V	FPU-2.7.6.2-9	First IF Ampl. gate 2	open or short circuit	Notify HIFI ICC	To be specified
no science data	none	FPU-2.7.6.2-10	Sec. IF Ampl.output	open, no signal or short circuit	Notify HIFI ICC	To be specified
anomalous HK value	HF_AV2_D_SIF1_V	FPU-2.7.6.2-11	Sec. IF Ampl. drain 1	open or short circuit	Notify HIFI ICC	To be specified
anomalous HK value	HF_AV2_G_SIF1_V	FPU-2.7.6.2-12	Sec. IF Ampl. gate 1	open or short circuit	Notify HIFI ICC	To be specified
anomalous HK value	HF_AV2_D_SIF2_V	FPU-2.7.6.2-13	Sec. IF Ampl. drain 2	open or short circuit	Notify HIFI ICC	To be specified
anomalous HK value	HF_AV2_G_SIF2_V	FPU-2.7.6.2-14	Sec. IF Ampl. gate 2	open or short circuit	Notify HIFI ICC	To be specified
anomalous HK value	HF_AV2_D_SIF3_V	FPU-2.7.6.2-15	Sec. IF Ampl. drain 3	open or short circuit	Notify HIFI ICC	To be specified
anomalous HK value	HF_AV2_G_SIF3_V	FPU-2.7.6.2-16	Sec. IF Ampl. gate 3	open or short circuit	Notify HIFI ICC	To be specified
no science data	none	FPU-2.7.7.1-1	Cryo-strap 2K	strap open	Notify HIFI ICC	To be specified

Symptoms	TM param	function_id	Function	Mode	Contingency Procedure	Possible Recovery
no science data	none	FPU-2.7.7.1-2	Cryo-strap 4K	strap open	Notify HIFI ICC	To be specified
no science data	none	FPU-2.7.7.1-3	Mixer output	open, no signal or short circuit	Notify HIFI ICC	To be specified
anomalous HK value	HF_AH1_MXJNC-V	FPU-2.7.7.1-4	Mixer bias	open or short circuit	Notify HIFI ICC	To be specified
no science data	none	FPU-2.7.7.1-5	First IF Ampl. output	open, no signal or short circuit	Notify HIFI ICC	To be specified
anomalous HK value	HF_AH2_D_FIF1_V	FPU-2.7.7.1-6	First IF Ampl. drain 1	open or short circuit	Notify HIFI ICC	To be specified
anomalous HK value	HF_AH2_G_FIF1_V	FPU-2.7.7.1-7	First IF Ampl. gate 1	open or short circuit	Notify HIFI ICC	To be specified
anomalous HK value	HF_AH2_D_FIF2_V	FPU-2.7.7.1-8	First IF Ampl. drain 2.	open or short circuit	Notify HIFI ICC	To be specified
anomalous HK value	HF_AH2_G_FIF2_V	FPU-2.7.7.1-9	First IF Ampl. gate 2	open or short circuit	Notify HIFI ICC	To be specified
no science data	none	FPU-2.7.7.1-10	Sec. IF Ampl.output	open, no signal or short circuit	Notify HIFI ICC	To be specified
anomalous HK value	HF_AH2_D_SIF1_V	FPU-2.7.7.1-11	Sec. IF Ampl. drain 1	open or short circuit	Notify HIFI ICC	To be specified
anomalous HK value	HF_AH2_G_SIF1_V	FPU-2.7.7.1-12	Sec. IF Ampl. gate 1	open or short circuit	Notify HIFI ICC	To be specified
anomalous HK value	HF_AH2_D_SIF2_V	FPU-2.7.7.1-13	Sec. IF Ampl. drain 2	open or short circuit	Notify HIFI ICC	To be specified

Symptoms	TM param	function_id	Function	Mode	Contingency Procedure	Possible Recovery
anomalous HK value	HF_AH2_G_SIF2_V	FPU-2.7.7.1-14	Sec. IF Ampl. gate 2	open or short circuit	Notify HIFI ICC	To be specified
anomalous HK value	HF_AH2_D_SIF3_V	FPU-2.7.7.1-15	Sec. IF Ampl. drain 3	open or short circuit	Notify HIFI ICC	To be specified
anomalous HK value	HF_AH2_G_SIF3_V	FPU-2.7.7.1-16	Sec. IF Ampl. gate 3	open or short circuit	Notify HIFI ICC	To be specified
no science data	none	FPU-2.7.7.2-1	Cryo-strap 2K	strap open	Notify HIFI ICC	To be specified
no science data	none	FPU-2.7.7.2-2	Cryo-strap 4K	strap open	Notify HIFI ICC	To be specified
no science data	none	FPU-2.7.7.2-3	Mixer output	open, no signal or short circuit	Notify HIFI ICC	To be specified
anomalous HK value	HF_AV1_MXJNC-V	FPU-2.7.7.2-4	Mixer bias	open or short circuit	Notify HIFI ICC	To be specified
no science data	none	FPU-2.7.7.2-5	First IF Ampl. output	open, no signal or short circuit	Notify HIFI ICC	To be specified
anomalous HK value	HF_AV2_D_FIF1_V	FPU-2.7.7.2-6	First IF Ampl. drain 1	open or short circuit	Notify HIFI ICC	To be specified
anomalous HK value	HF_AV2_G_FIF1_V	FPU-2.7.7.2-7	First IF Ampl. gate 1	open or short circuit	Notify HIFI ICC	To be specified
anomalous HK value	HF_AV2_D_FIF2_V	FPU-2.7.7.2-8	First IF Ampl. drain 2.	open or short circuit	Notify HIFI ICC	To be specified
anomalous HK value	HF_AV2_G_FIF2_V	FPU-2.7.7.2-9	First IF Ampl. gate 2	open or short circuit	Notify HIFI ICC	To be specified
no science data	none	FPU-2.7.7.2-	Sec. IF Ampl.output	open, no signal or short circuit	Notify HIFI ICC	To be specified

Symptoms	TM param	function_id	Function	Mode	Contingency Procedure	Possible Recovery
		10				
anomalous HK value	HF_AV2_D_SIF1_V	FPU-2.7.7.2-11	Sec. IF Ampl. drain 1	open or short circuit	Notify HIFI ICC	To be specified
anomalous HK value	HF_AV2_G_SIF1_V	FPU-2.7.7.2-12	Sec. IF Ampl. gate 1	open or short circuit	Notify HIFI ICC	To be specified
anomalous HK value	HF_AV2_D_SIF2_V	FPU-2.7.7.2-13	Sec. IF Ampl. drain 2	open or short circuit	Notify HIFI ICC	To be specified
anomalous HK value	HF_AV2_G_SIF2_V	FPU-2.7.7.2-14	Sec. IF Ampl. gate 2	open or short circuit	Notify HIFI ICC	To be specified
anomalous HK value	HF_AV2_D_SIF3_V	FPU-2.7.7.2-15	Sec. IF Ampl. drain 3	open or short circuit	Notify HIFI ICC	To be specified
anomalous HK value	HF_AV2_G_SIF3_V	FPU-2.7.7.2-16	Sec. IF Ampl. gate 3	open or short circuit	Notify HIFI ICC	To be specified
no science data	none	FPU-2.8.1.1-1	IF input band 1	open, no signal or short circuit	Notify HIFI ICC	To be specified
no science data	none	FPU-2.8.1.1-2	IF input band 2	open, no signal or short circuit	Notify HIFI ICC	To be specified
no science data	none	FPU-2.8.1.1-3	IF input band 3	open, no signal or short circuit	Notify HIFI ICC	To be specified
no science data	none	FPU-2.8.1.1-4	IF input band 4	open, no signal or short circuit	Notify HIFI ICC	To be specified
no science data	none	FPU-2.8.1.1-5	IF input band 5	open, no signal or short circuit	Notify HIFI ICC	To be specified
no science data	none	FPU-2.8.1.1-6	IF output	open, no signal or short circuit	Notify HIFI ICC	To be specified
no science data	none	FPU-2.8.1.2-1	IF input band 6L	open, no signal or short circuit	Notify HIFI ICC	To be specified
no science data	none	FPU-2.8.1.2-2	IF input band 6H	open, no signal or short circuit	Notify HIFI ICC	To be specified
no science data	none	FPU-2.8.1.2-3	IF output	open, no signal or short circuit	Notify HIFI ICC	To be specified

Symptoms	TM param	function_id	Function	Mode	Contingency Procedure	Possible Recovery
no science data	none	FPU-2.8.2.1-1	IF input band 1	open, no signal or short circuit	Notify HIFI ICC	To be specified
no science data	none	FPU-2.8.2.1-2	IF input band 2	open, no signal or short circuit	Notify HIFI ICC	To be specified
no science data	none	FPU-2.8.2.1-3	IF input band 3	open, no signal or short circuit	Notify HIFI ICC	To be specified
no science data	none	FPU-2.8.2.1-4	IF input band 4	open, no signal or short circuit	Notify HIFI ICC	To be specified
no science data	none	FPU-2.8.2.1-5	IF input band 5	open, no signal or short circuit	Notify HIFI ICC	To be specified
no science data	none	FPU-2.8.2.1-6	IF output	open, no signal or short circuit	Notify HIFI ICC	To be specified
no science data	none	FPU-2.8.2.2-1	IF input band 6L	open, no signal or short circuit	Notify HIFI ICC	To be specified
no science data	none	FPU-2.8.2.2-2	IF input band 6H	open, no signal or short circuit	Notify HIFI ICC	To be specified
no science data	none	FPU-2.8.2.2-3	IF output	open, no signal or short circuit	Notify HIFI ICC	To be specified
no science data	none	FPU-3.1-1	IF output signal HRS	open, no signal or short circuit	Notify HIFI ICC	To be specified
no science data	none	FPU-3.1-2	IF output signal WBS	open, no signal or short circuit	Notify HIFI ICC	To be specified
no science data	none	FPU-3.1-3	Oscillator	open, no signal or short circuit	Notify HIFI ICC	To be specified
HK value OOL	HF_APR_UCONH_C	FPU-3.1-4	Oscillator supply	open or short circuit	Notify HIFI ICC	To be specified
no science data	none	FPU-3.2-1	IF output signal HRS	open, no signal or short circuit	Notify HIFI ICC	To be specified
no science data	none	FPU-3.2-2	IF output signal WBS	open, no signal or short circuit	Notify HIFI ICC	To be specified
no science data	none	FPU-3.2-3	Oscillator	open, no signal or short circuit	Notify HIFI ICC	To be specified
HK value OOL	HF_APR_UCONV_C	FPU-3.2-4	Oscillator supply	open or short circuit	Notify HIFI ICC	To be specified