Venus sample return mission revisited

Contact information:
Dominique Valentian
Consultant
AAAF member,
e-mail : dominique.valentian@wanadoo.fr
Phone : xx(33) 6 62 08 80 10

Written by:
Dominique Valentian*, Christophe Koppel, Philippe Mairet*, Loup Mairet*.
*Members of The AAAF EOS commission.

AAAF: Association Aéronautique et Astronautique de France.
EOS stands for: Exploration and Observation of Space.

Edition 1 dated: April 26, 2019
Edition 2 dated: May 24, 2019
Edition 3 dated: June 4, 2019
Edition 4 dated: July 9, 2019

Table of contents

List of figures

1. Introduction

This White Paper has been written in perspective of the ESA consultancy "Voyage 2050" in order to go beyond the simple ESA public consultation. It is focused on the very difficult question of Venus sample return already studied in depth by NASA /JPL and ESA.
The Venus sample return is very interesting from the scientific point of view. The soil composition analysis will offer clues on the mechanisms explaining the differences between Venus and Earth.
However the sample recovery is extremely difficult. The ground conditions are very harsh (460°C, 9.6 MPa). The Delta V requirement is almost as high as on Earth, and the launch shall occur above 55 km I e. suspended under a balloon, thus requiring an UAV to lift the samples from ground to balloon altitude.
The mission involves several critical points, each with a significant probability of failure:

- Thermal exposure during sample drilling.
- Fast balloon inflation under very high temperature.
- Thermal exposure of the UAV during ascent to launch altitude.
- Error on launch parameters leading to the impossibility to perform a rendezvous with orbital vehicle.

The purpose of this document is to propose new methods at each critical step, involving a risk reduction for the mission… at the expanse of launch mass.
Owing to the overall launch mass and mission complexity, this proposal may be ranked in the "L" class mission.

2. Venus characteristics

2.1 Planet characteristics

Parameter	Venus	Earth	Ref.
Mass (kg)	4.869E+24	5.974E+24	[NSSDC]
Equatorial radius (km)	6051.8	6378.1	[NSSDC]
Density (kg/m3)	5243	5515	[NSSDC]
Surface gravity g (m/s2)	8.87	9.78	[Allen99]
Equatorial escape velocity (km/s)	10.36	11.18	[Allen99]

Solar day: 116.5 terrestrial days. At a 300km altitude, the orbital speed is 7151 m/s.

2.2 Atmosphere composition:

The atmosphere is essentially formed of CO_2 (96.5%) and nitrogen (3.5%).

2.3 Cloud layers:

31 - 51 km	haze
51 – 52 km	clear zone
52 - 58 km	Sulfuric acid droplets (25% water)
58 – 68 km	Ice crystals

2.4 Atmosphere model:

The following table provides the values used in the study

Height	T	P	D	Zonal wind speed
(km)	(°C)	(bar)	Kg/m3	(m/s) avg (min-max)
70	-43	0.037		92 (62 – 124)
55	29	0.53	0.93128	60 (39 – 90)
50	77	1.1	1.6689	61 (38 – 80)
30	224	9.6	10.298	36 (22 – 49)
10	385	38		5 (-2 – 11)
0	462	92	66.381	0.5 (-1 – 1)

Planetary protection: No protection required. Aerobot and microprobes fall under a COSPAR category I mission.

3. Consequences:

The examination of these tables suggest several findings:

- The safe altitude for an airborne rocket launcher is between 50 and 55 km altitude: below 50 km, the temperature is too high for the propellants, above 55 km, the density could be too low for a "high temperature" balloon or for an UAV.
- This zone is covered by sulphuric acid clouds except the 51 to 52 km layer, too narrow for a safe operation. Therefore, optical rendezvous may be not practical and should be replaced by RF link.
- The zonal winds (60 m/s at 55km altitude) complicate the rendezvous between a balloon or UAV and the air borne launcher. This is why most scenarios imply an equatorial sample return.
- The solar flux is sufficiently high at 50 – 55 km to supply the vehicles.
- The safe altitude for a conventional balloon inflation is at least 30 km (224°C temperature is compatible with Kapton® use).
- The Venus ground atmosphere density is 40 times higher than sea level atmosphere. Therefore, it is much easier to move an UAV on Venus than on Earth. On Venus surface, the required power will be 7 times lower than on Earth for the same thrust.

4. Analysis of previous works

The reference [1] provides a very detailed mission analysis and architecture proposal.
The VAV (Venus Ascent Vehicle) was supposed to be launched from 66 km altitude and included 3 solid propellant stages (STAR 24C, 17A and 13A, for a total launch mass of 476 kg and 8375 m/s Delta V for a 300 km circular equatorial orbit, orbital period 93 minutes). These solid propellant thrusters would require major modifications to integrate a TVC nozzle. The VAV payload was 2 kg. The margin for gravity losses, aerodynamic drag and thrust orientation was fairly low (only 1220 m/s) while the common practice is 1500 m/s.
The lander was bathed by ambient pressure but protected by noble gas (helium) and fibrous thermal insulation (figure 1). The authors recognised that helium was not the best choice (high thermal conductivity).
Another big issue in this design was the effect of external pressure on solid propellant stages they may not survive 9 MPa external (buckling) pressure.
A third point is the maximum temperature encountered by solid propellant during the whole VAV mission. The slow balloon ascent will tax the overall mission duration by several hours (four hours), thus potentially leading to solid propellant overheating (safe storage temperature is generally limited to 60°C).
The balloon survival is problematic: it shall be inflated rapidly and be operational from 9.6 MPa to 0.01 MPa (almost a factor 1000 on volume). This is barely feasible on Earth for stratospheric balloons, benefiting in addition of the added advantage of an auxiliary balloon to lift the payload inside the troposphere.
The mass budget is very constrained (3 tons) in order to fit within the launch capability of a Delta4 M with a C3 value of 9 km^2/s^2.
Both orbiter and lander were using a ballute to perform aerocapture. This very risky approach was intended to save mass (14% of the entry mass instead of 30% with conventional shied). The entry speed was 11.75 km/s.
In a more recent document [4] the authors stressed the interest of UAV to raise the samples from ground to balloon flying altitude (55 km) in order to get rid from the risks of balloon inflation on Venus surface

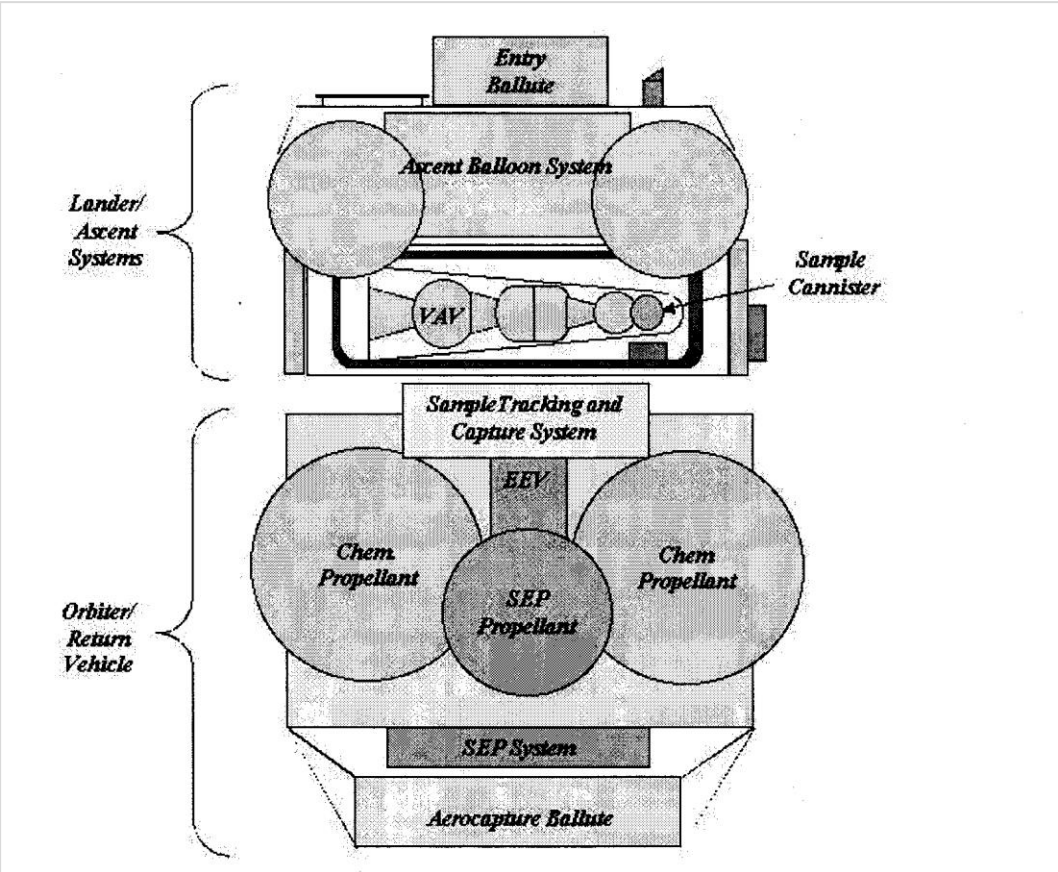

Figure 1 launch configuration for the Venus Surface Sample Return system. The Venus ascent vehicle (VAV) shown in the Landed Ascent systems is just under 3m long.

5. Proposed Mission profile

The mission involves four types of vehicles:

- An orbiter, intended to return the samples to Earth (sample return orbiter).
- A second orbiter holding multiple landers, aiming at increasing the overall probability of success. Each lander includes an UAV, able to lift-off vertically and return to the balloon with the sample.
- A rocket / balloon assembly, drifting at 55 km altitude and collecting the different samples before returning toward the orbiter and delivering the samples.
- Small planetary probes for navigation and RF relay purposes between the various modules.

At least two launchers, and preferably three, are required to launch the payloads.

- The balloon / rocket assembly requires the heaviest launcher (ARIANE 64 or equivalent).
- A second launcher can lift the three landers, the sample return orbiter and the four navigation / relay small probes (will also require ARIANE 64 or equivalent).

Using three launchers may provide more flexibility. The second launcher will launch the three landers and the third one the sample return orbiter with the small planetary probes.
The added benefit of three separate launches is the increased possibility of international cooperation. One of the three launches can be performed outside Europe.
The launches can take place several months apart. The last vehicle in operational orbit (300km) shall be the rocket / balloon assembly, in order to limit the storage time of liquid hydrogen (balloon inflation).
All three large orbiters (rocket / balloon assembly, sample return orbiter, multiple landers orbiter) will follow the same orbit insertion technique: chemical capture on a highly elliptical orbit and orbit circularisation to 300 km by EP and / or aerobraking. The EP circularisation will take more than one year.

This mission profile is preferred to the classical hyperbolic entry. The expected benefits are related to the much lower deceleration of the entry body (6 g max. instead of 200) and the much lower mass budget for the entry shield.

Lander and sample collection:
The lander baseline is an UAV, taking off vertically from the Venus surface after sample collection, able to benefit from wings lift in order to spare the electrical power for cruise and balloon search and returning to vertical lift for the balloon / rocket rendezvous. The lander UAV is described in chapter 6.

Bearing in mind the strong winds at 55 km altitude, The UAV ascent will be synchronised with the anticipated balloon / rocket position at the anticipated rendezvous time. For example, if the ascent duration is 1 hour (55 km), the balloon / rocket will drift 216 km during this hour. The RF visibility radius is 818 km, more than sufficient for mutual position determination.
On the other hand, the vehicles orbiting at 300 km will only be "visible" from ground during only 539 s, much less than the descent ascent duration. Hence the great interest of relay satellites on higher orbit for telemetry relay and navigation.
The UAV lander could be used for atmosphere monitoring during descent / ascent with instrumentation such as: temperature, pressure, turbulence, nephelometer, wind speed and direction deduced from RF signal location and last, ground imagery before landing.

The rocket balloon assembly is described in chapter 7 and the Sample return orbiter in chapter 8.

6. UAV Lander

6.1 UAV Thermal control

The most difficult question is the lander thermal control. The heat flux from the outer atmosphere at 460°C will be limited by thermal insulation and absorbed by a phase change thermal accumulator.
Two techniques are considered:

- Thermal insulation under double wall vacuum.
- Thermal insulation at ambient pressure (as in the case of [1]).

Governing parameters:
(Either double wall or ambient pressure). They show that the overall size governs the "lifetime" of the insulation / heat accumulator combination. The required "lifetime" shall be at least 12 hours.
The candidates for phase change materials (PCM) are alkali metals and water ice:

	Tf°C	Lf kJ / kg	Cp kJ / kg K		Conductivity W / m K		Specific Mass Kg / m^3	
			Solid	liquid	Solid	liquid	Solid	liquid
Li	179	420	3.30	3.3	71	43		530
Na	97	115	1.23	1.3	135	85		970
K	64	61	0.74	0.8	99	50		860
H_2O	0	334	2.1	4.18	2,3	0,6	912	1000

Water ice is retained. The working temperature is from -20°C to + 40°C. Thus the overall heat capacity is 543200 J/kg.
Practically, the ice is contained in small plastic pellets. A fluid loop insures the heat transfer to the payload.
The pellet scheme is used in the refrigeration industry as heat accumulator.
The accumulator will be frozen in space during the interplanetary cruise, using an auxiliary cooling loop.

Thermal insulation under double wall vacuum
The computations are made in the case of a sphere.

The overall design is very close to the one of Ariane 5 SSHeL (Sous Système de Stockage d'Helium Liquide).The spherical or cono-spherical shape can be easily integrated in an aerodynamic structure like a quadcopter (figure 2). The figure 3 shows a possible layout for a winged quadcopter also able to cruise like a plane in order to save energy at rendezvous altitude.

Temperature (K)	360	490	600	733 *
Effective conductivity *10^6 (W/cm.°C)	3	4.5	7	9.5

(*): This value (460°C) is extrapolated for the purpose of the study.

The equivalent conductivity can be computed from the formula:

$\lambda \times 10^6 = 2.3 + 0.00045\,(T - To) + 0.5\,(T^{2.5} - To^{2.5})/To^{2.5}$

The MLI is 1.27 cm thick, and includes 30 layers. The cold temperature is 286 K (13°C).

These values are from the reference:

Performance of multilayer insulation systems for the 300 to 800 K temperature range. E. R. Streed et Al. AIAA-65-663. AIAA Thermophysics Conference. September 13-15 1965.

The corresponding flux is 33.4 W/m2 at 733 K.

The conductive losses (polar or equatorial mount, harness) shall be added.

The following table provides computations for 1 m and 0.5 m diameter spheres. As expected, the "lifetime" of the 1 m diameter sphere is 2 times higher.

Sphere diameter	m	0,5	1
Radiative Flux	W/m^2	33,4	33,4
Radiative heating	W	26,232	104,929
Conductive losses	W	25	100
Heating power	W	51,232	204,929
Cp ice	J/kg.K	2100	2100
L	J/kg	334000	334000
Cp water	J/kg.K	4180	4180
Ti		-20	-20
Tf		40	40
Heat capacity	J/kg	543200	543200
Sphere volume	m^3	0,0654	0,5236
PCM mass	kg	6,545	52,360
Heat storage	J	3555235,69	28441885
Duration	Hour	37,65	75,29

The PCM mass is estimated supposing that it requires 10% of the inner sphere volume and a 1000 kg / m^3 specific gravity.

Practically, the lifetime will be much smaller, due to the heat dissipated by the battery operation, the electronics and possibly the electrical motors.

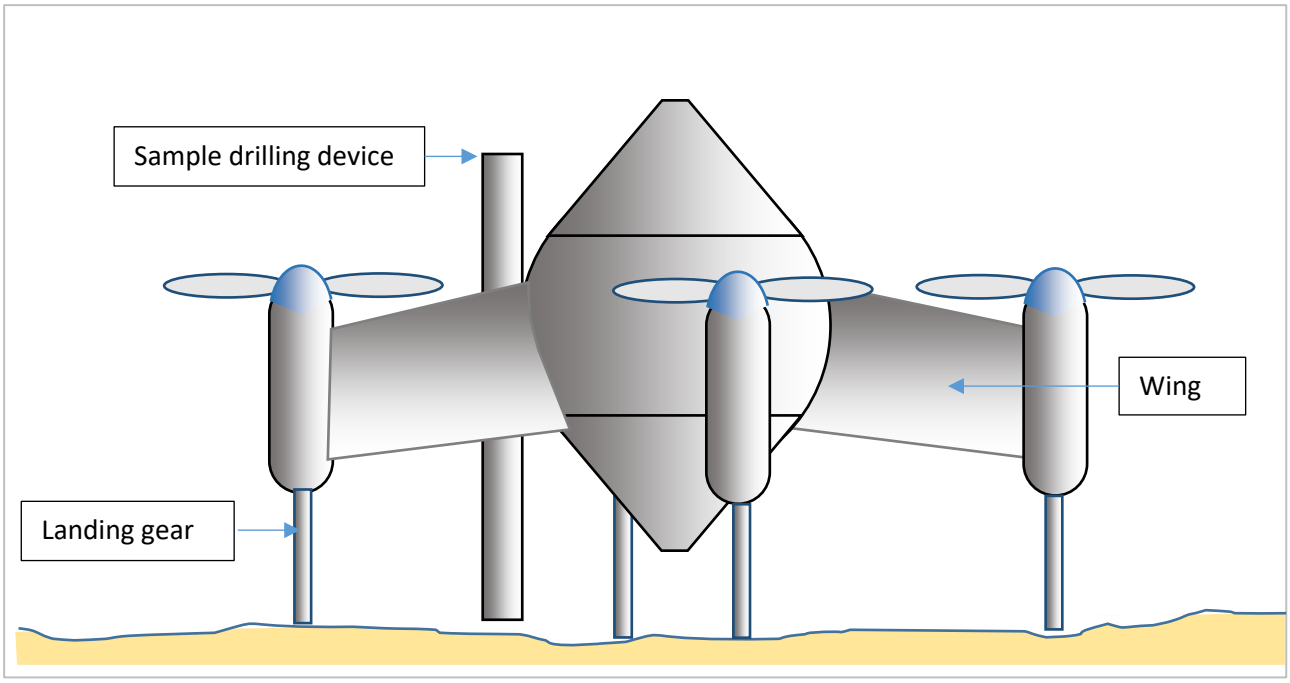

Figure 2: UAV Aerodynamic integration

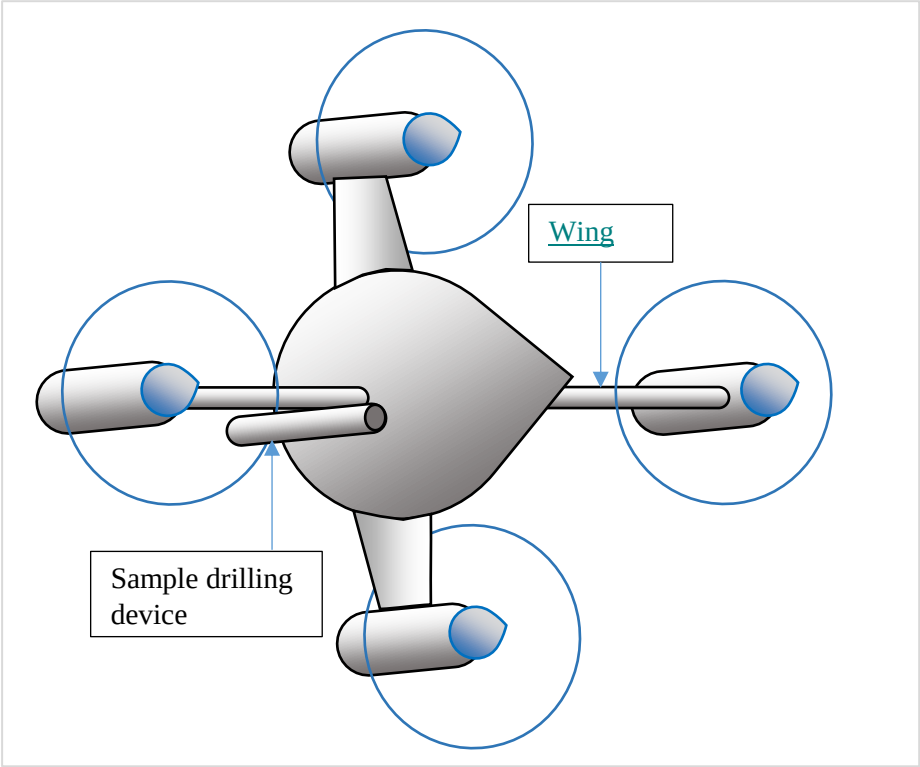

Figure 3: Inflight (cruise) configuration

The figure 4 shows the thermal insulation concept (polar mounting).
The external shell includes a honeycomb structure to improve the buckling resistance (9.6 MPa external pressure).The material for sphere and honey comb could be silicon carbide offering a good combination of mechanical resistance (1000 Pa) elasticity modulus (20 GPa) and low density (2.5).

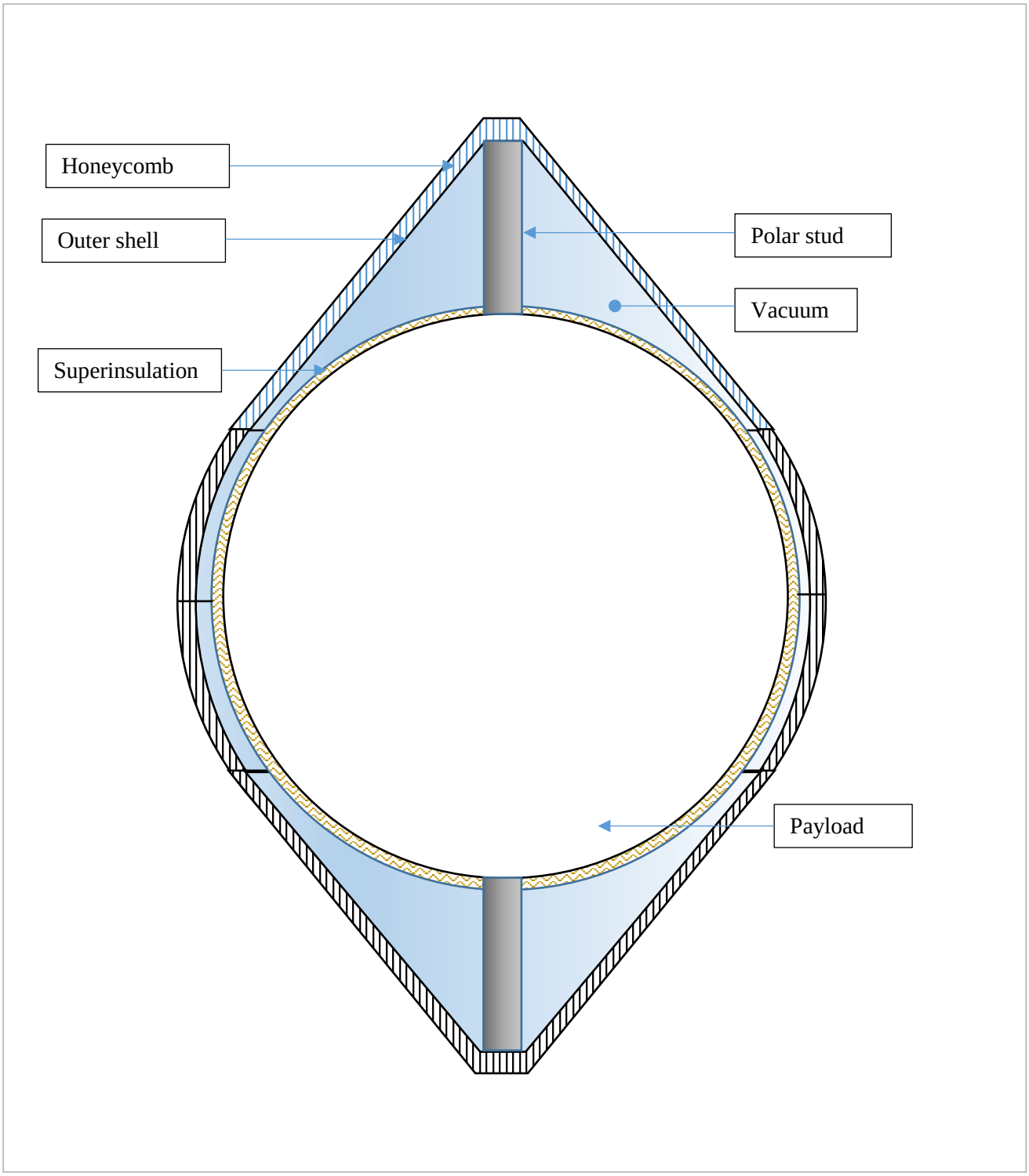

Figure 4: Evacuated thermal insulation concept.

The figure 5 shows an alternate configuration with a low thermal conductivity equatorial flange.
The figure 6 show the mounting sequence of the evacuated sphere. After payload integration, the upper part of the inner sphere is welded (e. g. by laser with controlled inner atmosphere). The upper thermal insulation is added and the upper outer hemisphere is positioned under vacuum and brazed by local EB heating.

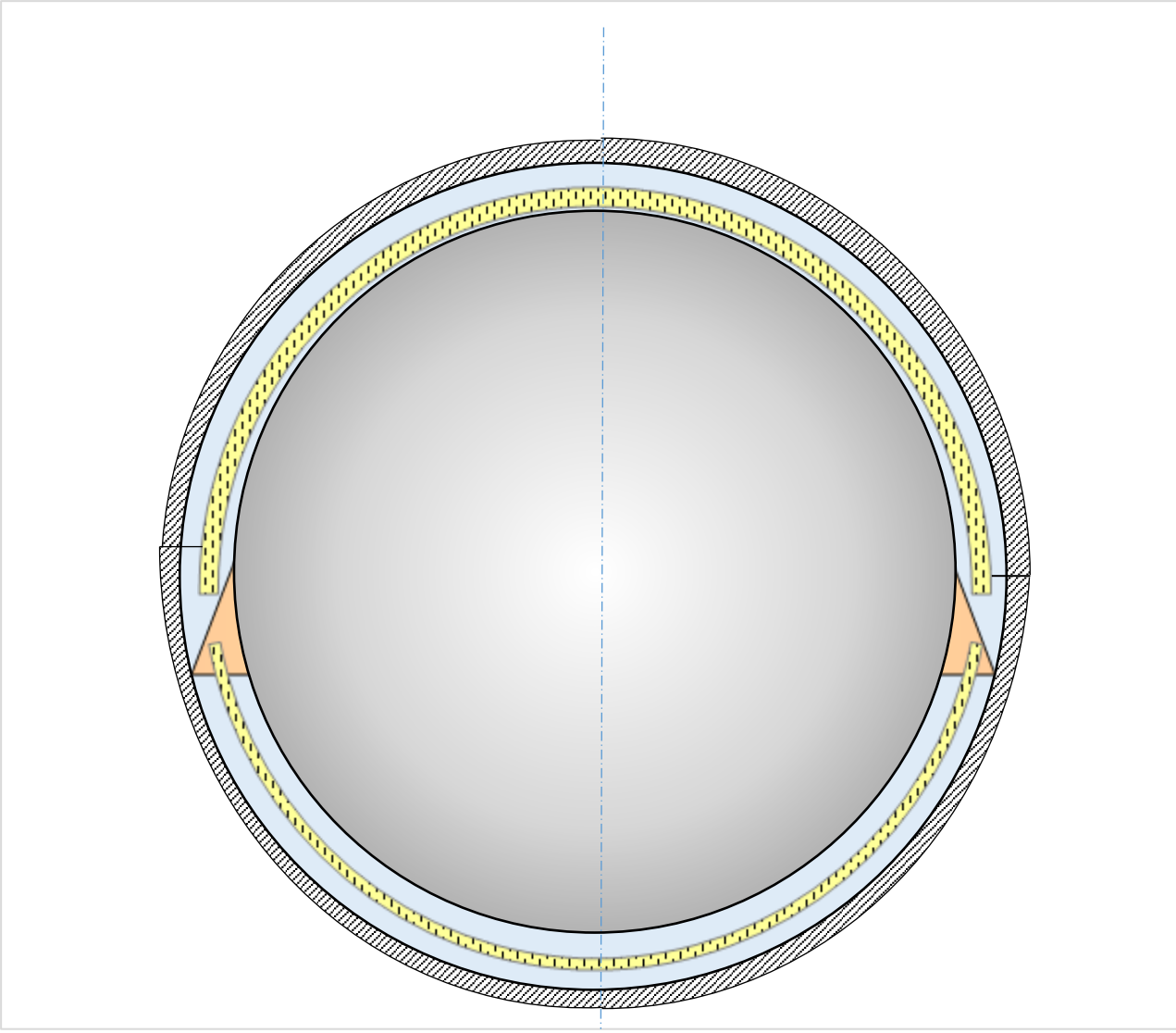

Figure 5: Alternate design with equatorial flange

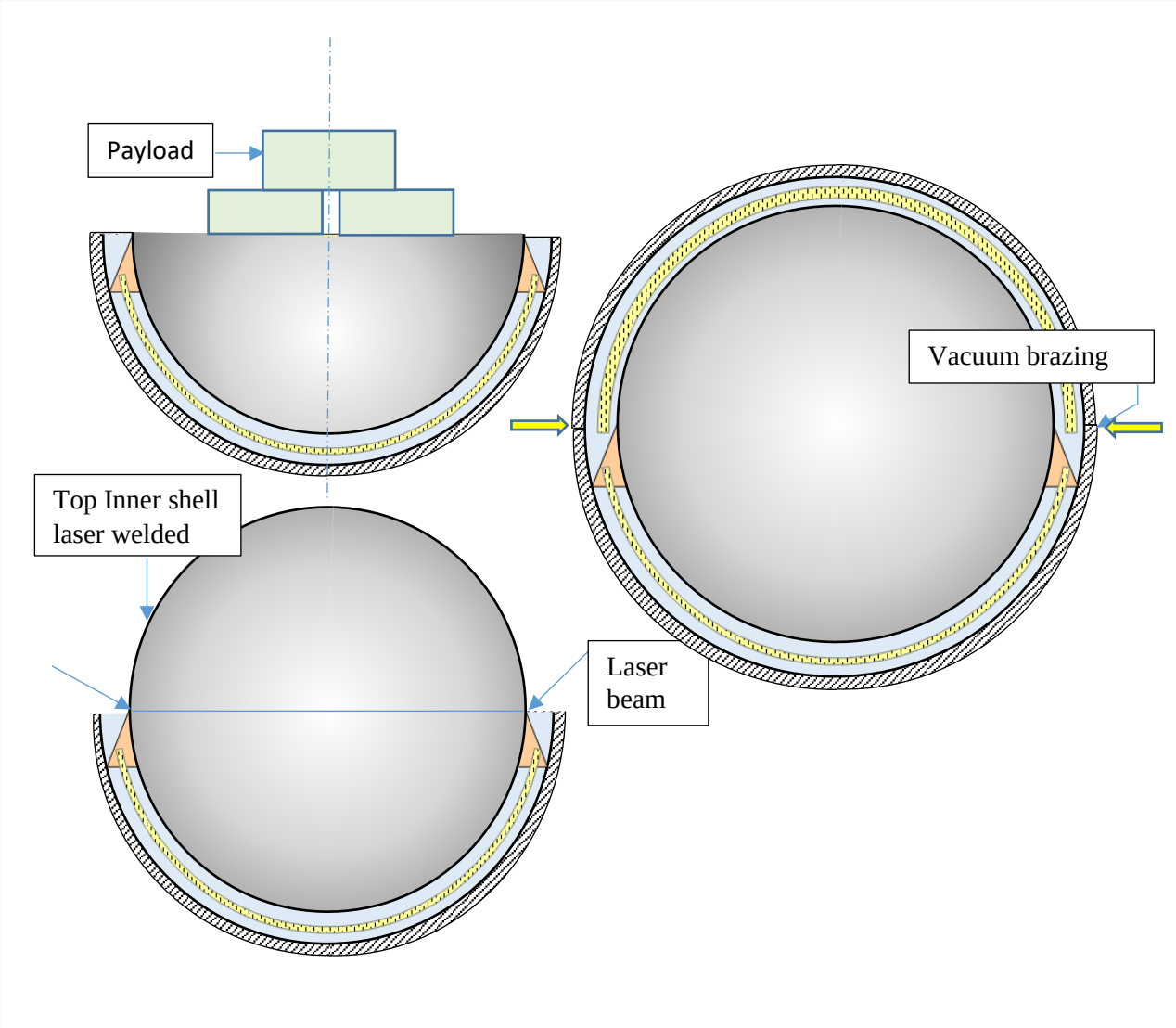

Figure 6 Steps of sphere closing

<u>Thermal insulation at ambient pressure</u>

This layout has the great advantage to get rid of the pressure shell (and its mass penalty). Most electronic components and batteries can work under high ambient pressure. This is the case of batteries used exploration submarines and ROV.

On the other hand, the gas shall remain under 40°C to enable correct payload operation and the thermal insulation will be less efficient than superinsulation under vacuum.

In order to improve thermal insulation, it is proposed to use a low thermal conductivity noble gas, flowing in laminar flow, in order to limit the heat flow in porous thermal insulation. This insulation will be made of either of MinK® or aerogel (silica or BN). In both cases, the thermal conductivity will be lower than the one of still air.

Xenon is the gas of choice. Its thermal conductivity is very low and it can be stored in supercritical mode with a very low mass penalty. By putting a second xenon tank outside, the progressive temperature increase will provide a flow in the inner supercritical xenon tank and the fluid will fill the volume to be cooled. A pressure regulator will control the supplied pressure.

As in the previous case, a water ice PCM will provide the cooling (figure 7).

The dead volume shall be very low in order to reduce the xenon inventory.

The laminar xenon flow will fill the inner cavity then flow downside in the double all and exhaust through the porous plug at the bottom.

Xenon will be also supercritical as ambient ground pressure is higher than the critical point:

Critical temperature (Tc)	289.733 K
Critical pressure (Pc)	5.8420 MPa
Critical density (Dc)	1100. kg/m^3

At 298 K and 9 MPa, the density will reach 1706.1 kg/m^3.
The thermal conductivity will be only 0.029272 W/m*K.
For a 30 cm dia. and 60 cm high body, the conducted loss through the nano porous material will be 202 W.
Using a 12.5 kg PCM, the heat flux will be absorbed during 9.3 hours.
This layout is well suited to small UAV.

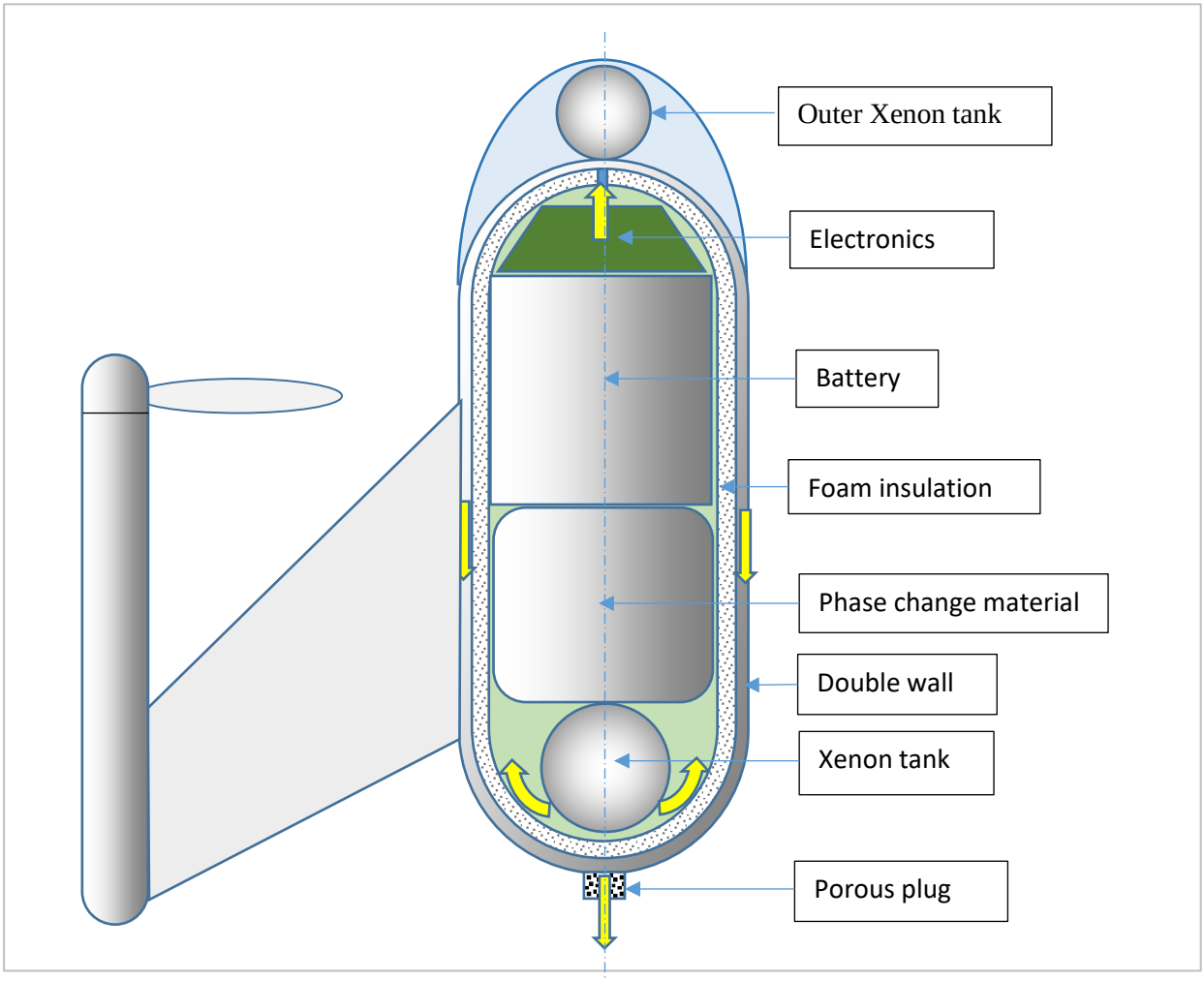

Figure 7 : Ambient pressure thermal insulation

Electrical motors:

A first solution consists in using high temperature motors with copper wire ceramic insulated (Cerafil ®)and immersed in a boron nitride cement for heat dissipation. The rotor permanent magnets will use a special version of SmCo5 able to handle 460°C (the normal ones are limited to 250°C). This will cost a 20 % loss on magnet performance.
The second solution is to cool the motors by a fluid loop linked to the main body and use vacuum insulation to lower the external heat flux. The big advantage of this solution is to allow for conventional motor technique.

UAV / Balloon rendezvous

The figure 8 shows the timeline of the rendezvous.

The RF horizon from the lander to 55 km altitude is 800 km (radius). Due to the altitude winds, the balloon / rocket will be visible during 7.6 hours. Supposing that the UAV takes 1 hour to climb to 55 km (this may be an optimistic value), the balloon will drift on 216 km during this time.
Anyway, this shows that RF visibility is not a problem for a permanent RF link during ascent and rendezvous.

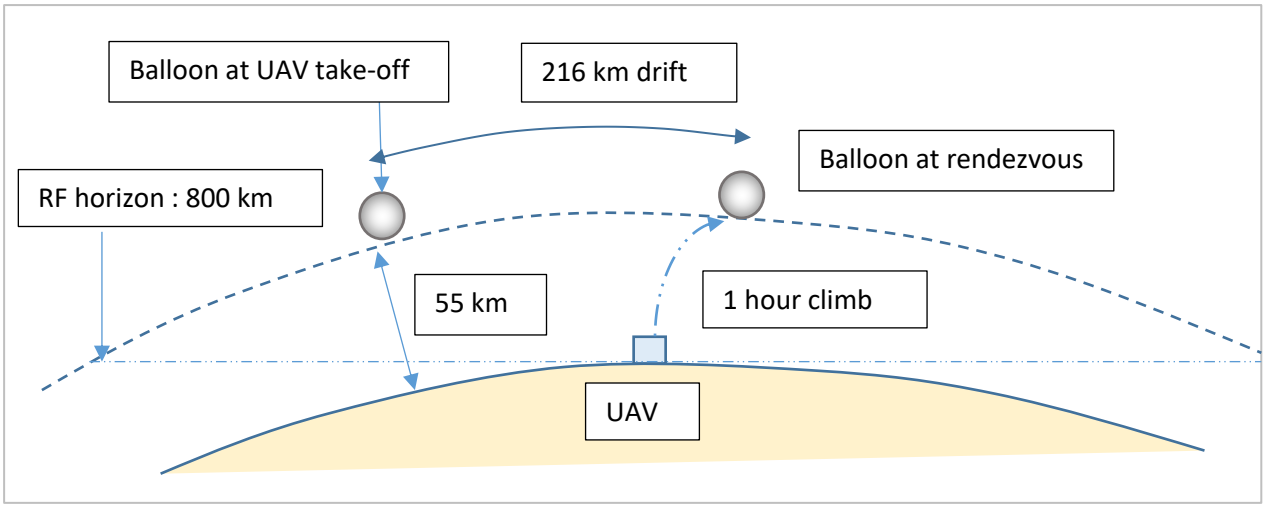

Figure 8 Balloon / UAV climb synchronisation

6.2 Sample recovery Balloon option

The recovery helped by a balloon is a fall-back solution if the UAV recovery reveals impractical (autonomy). However, it shall be noted that the rendezvous will be best performed by an UAV suspended under the balloon as the balloon will provide only a limited manoeuvring capability.

Metal balloon

Due to the high temperature of the Venus surface, a metal foil (e. g. 100 µm) combined to a glass fibre canvas (with polyimide impregnation) may be the safest way to get a suitable balloon envelope. Pure aluminium wall offer a very high plastic domain. At 460°C the mechanical resistance will be very low, hence the necessity to handle the stress with a glass fibres canvas. The folding of the envelope shall be performed very carefully to avoid any shear down of the metal foil (origami style folding).

Kapton® balloon

The Kapton® balloon can be inflated only near30 km altitude, due to temperature limitation. The initial pressure will be 0.96 MPa, lowered to 0.05 MPa at cruising altitude (55 km).
The flight from ground level to 30 km will be provided by an UAV, thus sparing the higher power required to fly in the lees dense atmosphere from 30 to 55 km. The last phase of the rendezvous will be performed by the UAV.

6.3 Landers launch configuration

Up to three landers can be accommodated on a single interplanetary module (figure 9). This layout is intended to increase the mission's probability of success. The fourth location on rocket's third stage (figure 11) will be used for atmospheric samples.
The very large shell helps to reach a very low ballistic coefficient:

Shell dia.	m	3.6
Mass	kg	450
Ballistic coefficient	kg/m^2	44.21

The entry will be triggered by a small solid propellant motor. No parachute will be used as the aeroshell will play in part this role. Then the aeroshell will be jettisoned and the UAV will land in helicopter mode.

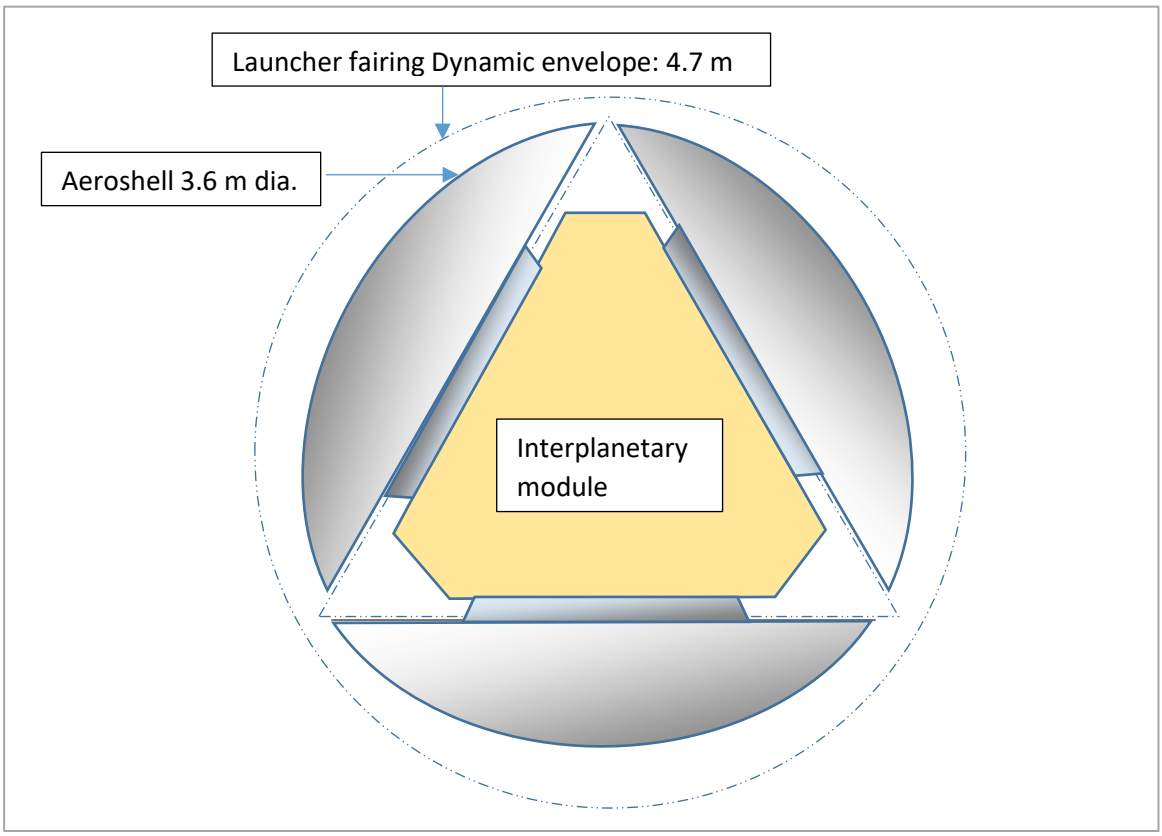

Figure 9 Multiples landers accommodation

7. Rocket / balloon assembly

The proposed rocket / launcher layout is: Two stages solid, bipropellant third stage.
Several micro launchers studies has been performed in Europe and abroad. Even using air launch, the minimum mas for a significant payload (40 -60 kg) is at least 6 tons. The first and second stages used solid propellant with Flexseal movable nozzle. The third stage used bipropellants, offering three advantages:

- The specific impulse is slightly higher than the solid one.
- The third stage is restartable, offering the possibility of a coast phase during flight (this is beneficial for the overall performance).
- The RCS can be used for roll control during second stage flight, fine orbit trimming and rendezvous.

For the proposed Venusian case, the layout could be:

- P 2.5 first stage, P 1 second stage, L0.25 bipropellant third stage.

P stands for solid Propellant stage.
The P 2.5 and P 1 will be scaled down version of a P6 design studied for micro-launchers.

Third stage description
490 N main engine, high Isp, 312 s
10 N RCS
CFRP propellant tanks, titanium liner.
The third stage will be integral with the samples holders (figures 11 and 12).
In order to increase the compactness of the rocket, the main nozzle is facing front. During the ballistic phase 2 – 3, the third stage will perform a half turn with the RCS thrusters before main engine firing.

Performance evaluation

The following table provides the overall Delta V computation:

Stage 1	Dry mass	250.00	g0Isp	2696.925
	Propellant	2500.00	Delta V (m/s)	2395.31
Stage 2	Dry mass	100	g0Isp	2893.065
	Propellant	1000	Delta V (m/s)	3424.04
Stage 3	Dry mass	75	g0Isp	3059.8
	Propellant	250	Delta V (m/s)	4486.67
LOM	kg	4935	Delta V total (m/s)	10237.55

LOM: Lift off Mass. All masses are in kg.

The Total Delta V provides ample margin for rendezvous manoeuvres. This margin can be traded-off for payload; for example, using 185 kg of propellant will provide a total Delta V of 8327 m/s and 65 kg more payload.

The third stage minimum dry mass include 40 kg for tanks and engines (16% of the propellant mass), 20 kg for the samples and samples holders and 15 kg for avionics, guidance RF link and energy source.

Rocket ascent trajectory:

The following table provides the burning time and maximum acceleration of each stage

Stage 1 burn time	s	90
Mean Flowrate	kg/s	27.78
Thrust	N	74914.58
Gamma max	m/s2	43.43 (4.43g)
Stage 2 burn time	s	60
Mean Flowrate	kg/s	16,67
Thrust	N	48218
Gamma max	m/s2	108.35 (11.05 g)
Stage 3 burn time	s	1873,34
Mean Flowrate	kg/s	0,16
Thrust	N	490
Gamma max	m/s2	0.15 (0.02 g)

The total burn time is 2023 s (2080 s with ballistic phase). During this time, the orbiter will cover 14 900 km. It will not be in visibility of the rocket at ignition, hence the interest of one or several small relay satellites at higher altitude (e. g. 10 000 to 30 000 km, preferably circular orbit), insuring also the navigation. At least two satellites shall be visible from the lander and balloon / rocket at a time. Four satellites may be better than three.

The rocket shall fit under the aeroshell (4.7 m dia.). A very compact design shall be retained.

The first stage volume shall be 1.67 m^3 to accommodate 2.5 tons of propellant (fortunately, the solid propellant density is1800 kg/m^3). This will fit in a vessel 2 m long and 1.15 m in diameter (with partially immersed nozzle).

The nozzles will use Flexseal TVC (Thrust Vector control) with electromechanical actuators.

Parachute:

The Rocket / balloon assembly / hydrogen storage will weigh around 6 tons. The parachute size will be similar to the one of an Apollo command module.

Lifting balloon

The balloon capacity must be at least 4000 m3 (at 0.1 MPa) in order to lift 5 tons. This corresponds to 4.84 m^3 (341.3 kg) of liquid hydrogen. Liquid hydrogen is preferred to liquid helium. It is easier to store during interplanetary flight and easier to evaporate by chemical heating (LOX GH2 reaction) as the inflation must

be performed rapidly (in order of 3 minutes) to guarantee safe deployment. When fully inflated, the balloon will be a 20 m diameter sphere.
The balloon inflation will start while the parachute is fully deployed. The parachute jettison time shall be fixed by further studies. Jettison while balloon inflation is still partial may be preferred in order to avoid the chafing of balloon envelope by the parachute lanyard.

The following table gives the characteristics of hydrogen storage.

Volume liquid	m3	4,84	Gas	m3	4000
specific gravity	kg/m3	70,516	Mass	kg	341,30
LH2 Sphere radius (10% ullage)	m	1,08	Outer sphere dia. (m)	m	2,26

The power required to heat 341 kg of hydrogen from liquid state to ambient is very high: 8 MW. This is roughly the power of an upper stage cryogenic engine gas generator. It will work at a mixture ratio of 1 (as engine gas generator) and the flow will diluted by the rest of liquid hydrogen. The H2 and O2 tanks will be pressurised with helium.

Enthalpy H2 liquid	kJ/kg	1,224
Enthalpy H2 gas NTP	kJ/kg	4233,5
Duration	s	180
Total H2 Flow	kg/s	1,90
H2 gas stoichiometric flow	kg/s	0,07
gas generator power	kW	8025

LH2 tank thermal design

Before and during launch the LH2 tank will be insulated by a combination of lightweight vacuum insulation (evacuated honeycomb) and superinsulation. The cooling will be provided by a helium loop.
In space, thermal losses will be reduced below 20 W by the combination of superinsulation and low thermal conductivity supports. The active refrigeration will be provided by a two stages cryocooler, providing 20 Watt at 20 K and requiring 2 kW of electrical power.

Balloon / rocket Earth launch configuration
The launch configuration will include an interplanetary cruise module, including chemical and electric propulsion modules (figure 10). The overall power will be in excess of 25 kW in order to supply EP.
EP will be provided by 5 x 5 kW HET thrusters. The cruise module will be extrapolated from a telecommunications satellite platform.
The vehicle will use the full capacity of Ariane 64, i. e. 11 tons HEO (or equivalent trajectory). A chemical firing at Earth perigee (450 – 600 m/s) will be sufficient to inject the vehicle toward Venus.
As a fall-back solution, a composite formed by the cruise module and a cryogenic propulsion module can be launched in LEO (overall mass 23 tons).
A second chemical burn will insure planetary capture (the mass after capture will be 6835 kg) and the orbit will be circularised by EP and / or aerobraking. A third chemical firing will provide entry.
The aeroshell will provide a ballistic coefficient close to the Soyuz one (6 -7 tons for 17.4 m^2).
In order to save weight, the aeroshell will be load bearing, made of a thin shell of SiC-carbon composite reinforced by a C – SiC truss with a radiative superinsulation.

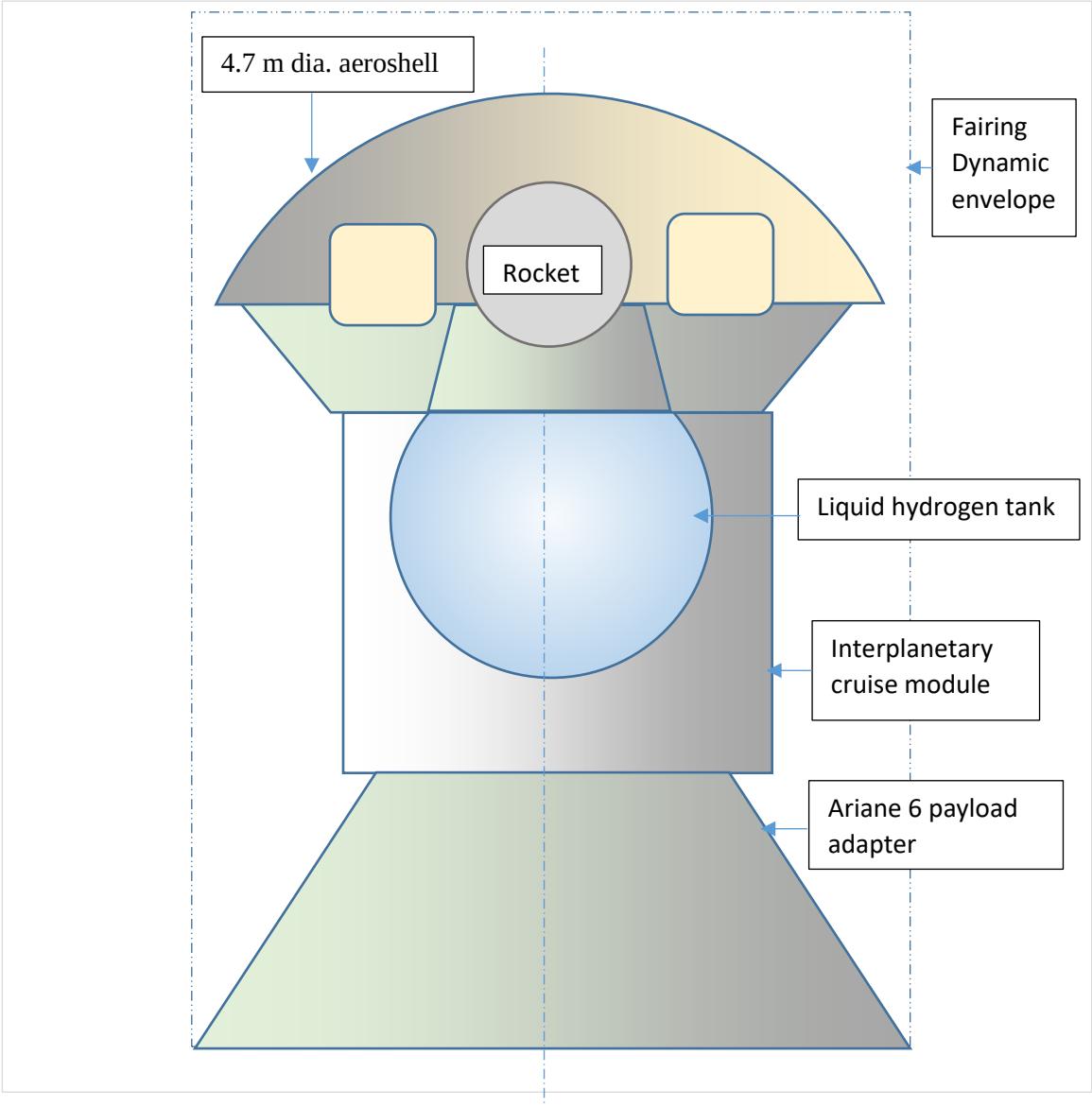

Figure 10: Launch configuration

8. Sample Return Orbiter

The orbiter will be very similar to the balloon / rocket interplanetary module: a chemical propulsion module and a HET propulsion module. The orbit acquisition will be the same:

- Chemical burn leading to a highly elliptical orbit:
- Transition to circular 300 km orbit by Electric Propulsion (HET).

The capture of the third stage of the rocket will be performed by a harpoon / robotic arm locking in the 490 N engine nozzle acting as a guide (figure 13).
The third stage will be integrated in the re-entry shield.
The return to Earth will be performed in the following way:

- EP will be used to reach a very high elliptical orbit.
- A small chemical burn at periapsis will inject the orbiter toward Earth.
- EP may be required for Delta V increase in interplanetary space.
- EP will be used to decrease the hyperbolic velocity before Earth arrival, thus easing the design of re-entry shield.

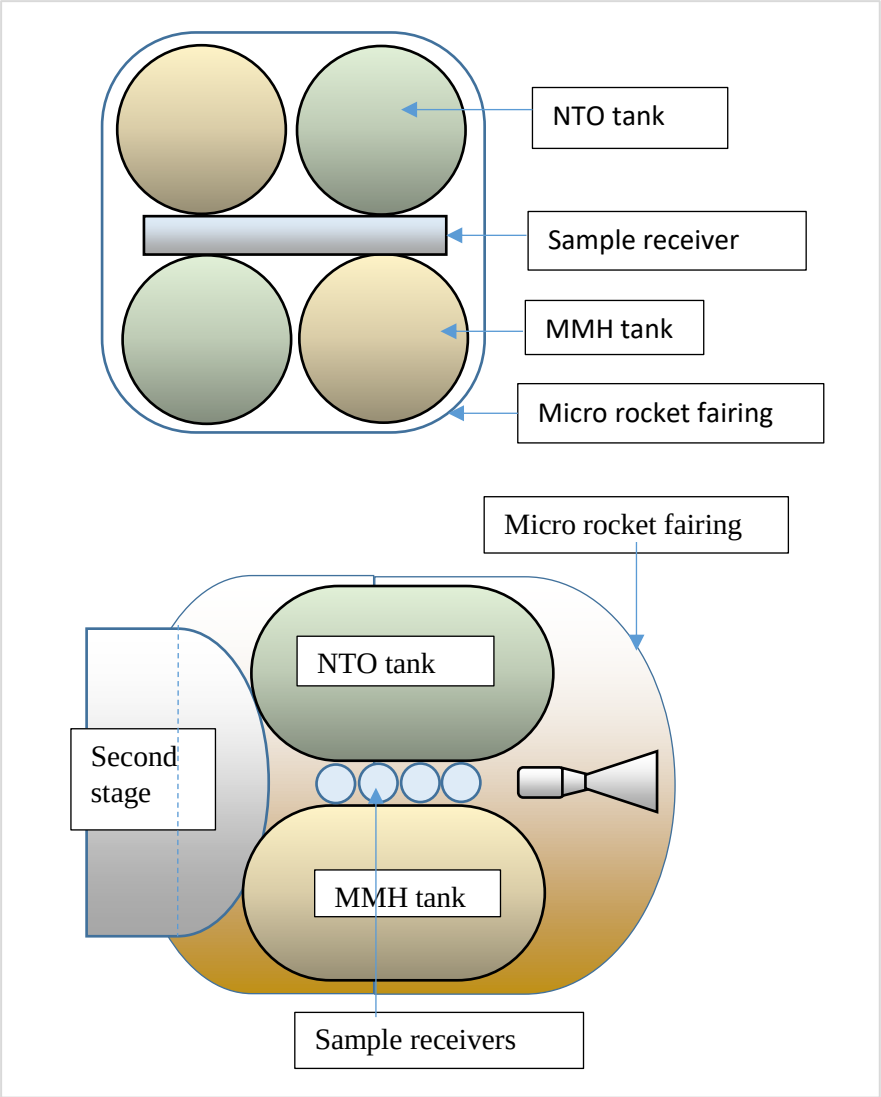

Figure 11 : Third stage front view (top) and side view

9. Conclusion

The proposed Venus Sample Return mission aims at reducing the risks associated to this mission. It involves the launch of two to three Ariane 6, the heaviest payload being the balloon / rocket assembly.
The multiple lander approach offers two advantages:

- It provides more scientific value by returning several types of soils.
- It lowers the risk associated to a single sample loss.

The technologies studied in the frame of this proposal could be used on less ambitious missions:

- Venus atmosphere sample recovery only (no lander).
- Extended life lander without sample return (the advanced thermal insulation concept could be combined with a RTG and a pulse tube cooler to provide months of operation on Venus surface).
- Venus low altitude UAV, providing an extended photographic aerial survey, using the advanced thermal insulation concept, allowing hours or days of operation in the very hot Venus atmosphere.
-

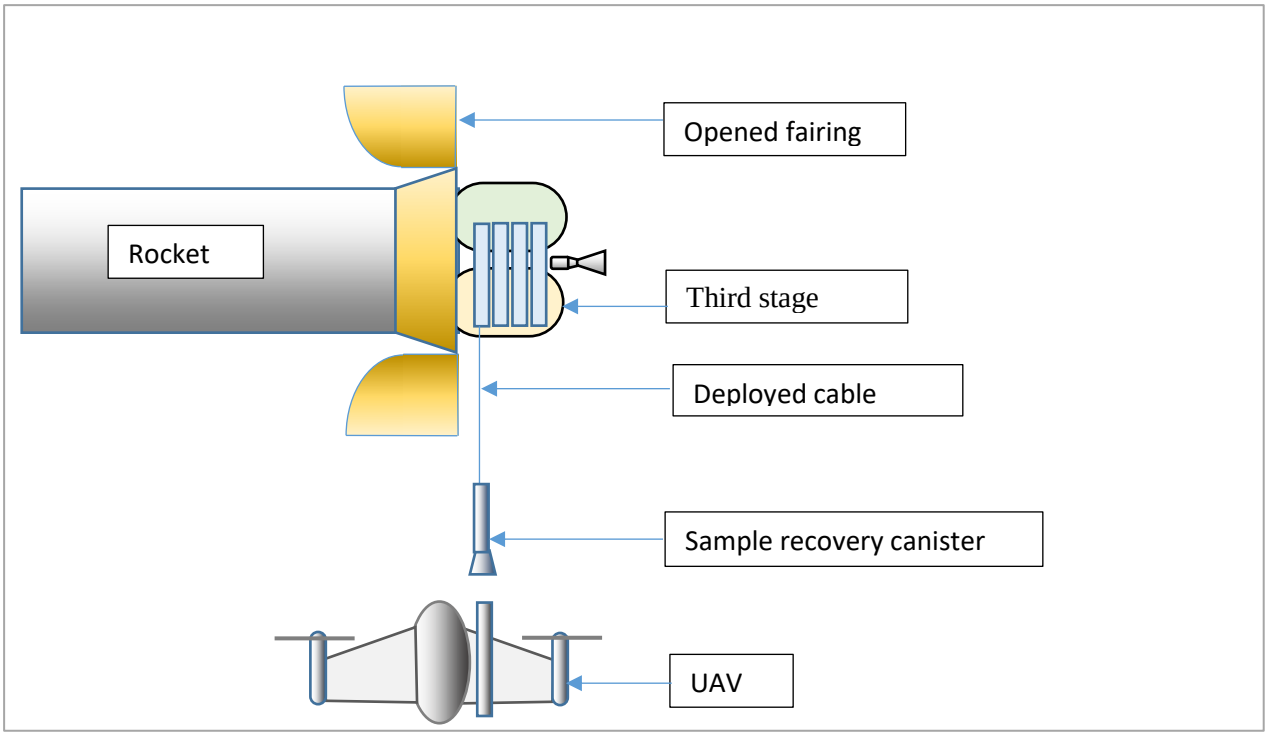

Figure 12 : Rendezvous and sample recovery

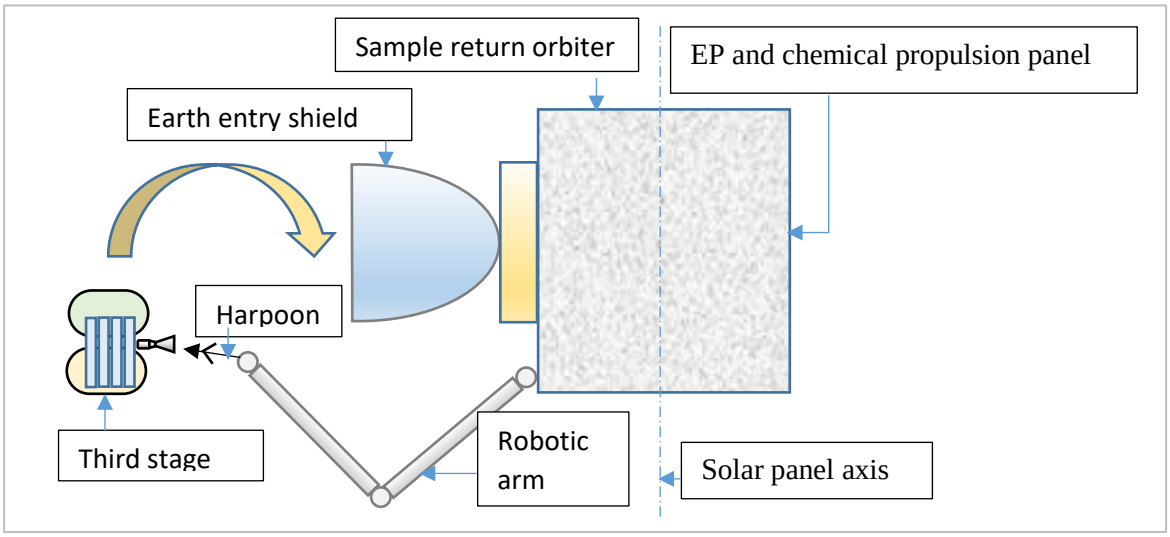

Figure 13 : Third stage capture and samples recovery

10. References

[1] Venus Sample Return A Hot Topic … David Rodgers, et Al. Jet Propulsion Laboratory, Pasadena, California. Conference Paper in IEEE Aerospace Conference Proceedings · February 2000

[2] G.E.N. Scoon and J.-P. Lebreton, Venus Sample Return Assessment Study Report, ESA Report SCI (98)3, June 1998, Noordwijk, the Netherlands.

[3] Chapter 6: Extra-terrestrial Drilling and Excavation. Kris Zacny et Al. final report of the AFL Science Steering Group ... Automation (ASTRA'98); 1998 Dec 1-3; ESTEC,

[4] Venus Surface Sample Return: A Weighty High-pressure Challenge. Ted Sweetser, Jonathon Cameron, Gun-Shing Chen, Jim Cutts, Bob Gershman, Martha S. Gilmore, Jeffrey L. Hall, Viktor Kerzhanovich, Angus McRonald, Erik Nilsen, Walt Petrick, David Rodgers, Carl Sauer, Brian Wilcox, Andre Yavrouian, Wayne Zimmerman, and the Advanced Projects Design Team of the Jet Propulsion Laboratory.

[5] Study overview of the Venus Entry Probe. Marcel van den Berg and Peter Falkner. An ESA Technology Reference Study. SCI-AP/2006/173/VEP/MvdB. 27/02/2007

List of contributors

Dominique Valentian
Consultant
AAAF member,
e-mail: dominique.valentian@wanadoo.fr
Phone: xx(33) 6 62 08 80 10

Christophe Koppel,
Consultant KopooS Consulting Ind.
AAAF member
e-mail: kci@kopoos.com

Philippe Mairet, Retired, (Airbus Commercial Aircraft)
AAAF member
Loup Mairet (Student)
AAAF member
e-mail: mairetfamily@yahoo.fr